GENESEE COUNTY PLANNING BOARD REFERRALS
NOTICE OF FINAL ACTION

GCDP Referral ID	**T-03-DAR-2-18**
Review Date	**2/8/2018**
Municipality	**DARIEN, T.**
Board Name	**PLANNING BOARD**
Applicant's Name	**Cuddy & Feder (American Towers/Verizon)**
Referral Type	**Special Use Permit**
Variance(s)	
Description:	**Special Use Permit to erect a new 115 ft. commercial communication tower.**
Location	**9657 Fargo Rd., Darien**
Zoning District	**Low Density Residential (LDR) District**

PLANNING BOARD DECISION

APPROVAL

EXPLANATION:

The proposed communications tower should pose no significant county-wide or inter-community impact. It is recommended that the applicant submits the enclosed application for 9-1-1 Address Verification to the Genesee County Sheriff's Office to ensure that an address be given to the proposed tower that meets Enhanced 9-1-1 standards. The applicant is reminded that per Genesee County Local Law, the carrier must route all emergency 911 calls originating in the County to the Emergency Dispatch Center at the Genesee County Sheriff's Office in Batavia.

Felix A. [illegible]

Director

February 8, 2018

Date

If the County Planning Board disapproved the proposal, or recommends modifications, the referring agency shall NOT act contrary to the recommendations except by a vote of a majority plus one of all the members and after the adoption of a resolution setting forth the reasons for such contrary action. Within 30 days after the final action the referring agency shall file a report of final action with the County Planning Board. An action taken form is provided for this purpose and may be obtained from the Genesee County Planning Department.

SEND OR DELIVER TO:
GENESEE COUNTY DEPARTMENT OF PLANNING
3837 West Main Street Road
Batavia, NY 14020-9404
Phone: (585) 815-7901

Clear Form

DEPARTMENT USE ONLY:
GCDP Referral # T-03-DAR-2-18

RECEIVED
Genesee County
Dept. of Planning
1/18/2018

* GENESEE COUNTY * PLANNING BOARD REFERRAL

Required According to:
GENERAL MUNICIPAL LAW ARTICLE 12B, SECTION 239 L, M, N
(Please answer ALL questions as fully as possible)

1. REFERRING BOARD(S) INFORMATION

Board(s) Town of Darien Planning Board
Address 10569 Alleghany Road
City, State, Zip Darien, NY 14040
Phone (585) 547 - 2274 Ext. 1026

2. APPLICANT INFORMATION

Name Cuddy & Feder (American Towers/Verizon)
Address 445 Hamilton Ave, 14th Floor
City, State, Zip White Plains, NY 10601
Phone (914) 761 - 1300 Ext. Email lchioccio@cuddyfeder.com

MUNICIPALITY: ☐ City ☒ Town ☐ Village of Darien

3. TYPE OF REFERRAL: (Check all applicable items)

- ☐ Area Variance
- ☐ Use Variance
- ☒ Special Use Permit
- ☒ Site Plan Review
- ☐ Zoning Map Change
- ☐ Zoning Text Amendments
- ☐ Comprehensive Plan/Update
- ☐ Other:

Subdivision Proposal
- ☐ Preliminary
- ☐ Final

4. LOCATION OF THE REAL PROPERTY PERTAINING TO THIS REFERRAL:

A. Full Address 9657 Fargo Road, Corfu, NY 14036
B. Nearest intersecting road Genesee St (about half way between Genesee & Reynolds)
C. Tax Map Parcel Number 1.-1-37.2 & 2.-1-9.2
D. Total area of the property 111 acres Area of property to be disturbed 0.23
E. Present zoning district(s) LDR

5. REFERRAL CASE INFORMATION:

A. Has this referral been previously reviewed by the Genesee County Planning Board?

☒ NO ☐ YES If yes, give date and action taken

B. Special Use Permit and/or Variances refer to the following section(s) of the present zoning ordinance and/or law

Article 7 & 8 Section 701 & 815

C. Please describe the nature of this request Install a new 115 ft monopole tower on 2.-1-9.2 (1.-1-37.2 needed for driveway access)

6. ENCLOSURES – Please enclose copy(s) of all appropriate items in regard to this referral

- ☒ Local application
- ☒ Site plan
- ☐ Subdivision plot plans
- ☒ SEQR forms
- ☐ Zoning text/map amendments
- ☒ Location map or tax maps
- ☐ Elevation drawings
- ☒ Agricultural data statement
- ☐ New or updated comprehensive plan
- ☒ Photos
- ☒ Other: studies

7. CONTACT INFORMATION of the person representing the community in filling out this form (required information)

Name Alice Calmes Title Town Clerk Phone (585) 547 - 2274 Ext. 1026
Address, City, State, Zip 10569 Alleghany Road, Darien, NY 14040 Email townclerk@townofdarienny.com

CUDDY
+FEDER
LLP

445 Hamilton Avenue, 14th Floor
White Plains, New York 10601
T 914 761 1300
F 914 761 5372
cuddyfeder.com

Lucia Chiocchio
lchiocchio@cuddyfeder.com

12/29/17

VIA OVERNIGHT MAIL

Members of the Planning Board
Town of Darien
Town of Darien Clerk's Office
10569 Allegany Road
Darien Center, New York 14040

Re: American Towers LLC
Special Permit and Site Plan Applications: Commercial Communication Tower
Premises: 9657 Fargo Road, Corfu, New York 14036 (Lots 1-1-37.2 & 2-1-9.2)
Site # 201958

Dear Members of the Planning Board:

This letter and enclosed materials are respectfully submitted on behalf of American Towers LLC as its Special Permit and Site Plan Applications for a communication tower facility at the above referenced Premises. American Towers' proposed communication facility will host the wireless facility of Verizon. As demonstrated in the application materials enclosed, Verizon needs American Towers' proposed wireless telecommunications facility to provide reliable wireless services to a part of the Town that currently has inadequate service.

American Towers is a leading independent owner, operator and developer of wireless and broadcast communications real estate. Since 1995, American Towers has made it possible for wireless technology to connect people, devices and networks.

American Towers' Communications Tower Facility

The Premises is an approximately 111-acre parcel in the Town, located off Fargo Road. Most of the Premises are agricultural with the property owner's single-family home in the southeast portion of lot 9.2. It is classified within the Low Density Residential ("LDR") District.

American Towers secured a lease with the property owner of the Premises for a 100' x 100' lease area in the eastern portion of the Premises. Within the lease area, American Towers proposes a 75' x 75' fenced equipment compound for the proposed tower and associated unmanned equipment. The tower is proposed as a new self-supporting monopole approximately 115' in height. Verizon will install 6 panel antennas and related equipment at a centerline height of approximately 110' on the

tower. At the base of the monopole within the equipment compound, Verizon will install equipment cabinets on an 11'-6" x 16' equipment platform.

The equipment compound will be enclosed by a 7' tall chain link fence. Access to the communication tower facility will be provided from Fargo Road along an existing paved drive, then turning on to an existing dirt tractor path that will be improved to an approximately 10' wide gravel drive. Utility connections will be routed underground along the proposed access drive from an existing utility pole on Fargo Road.

Both the tower and equipment compound are designed to accommodate future shared use by other FCC licensed wireless carriers.

American Towers will construct, own and maintain the communication tower and Verizon will lease space from American Towers to locate and operate its wireless facility on the communication tower and within the equipment compound.

American Towers' Proposed Communication Tower Facility Meets the Standards for Special Permit and Site Plan Approval

Sections 701 (Low Density Residential District LDR) and 815 (Commercial Communication Towers) of the Town of Darien Zoning Law ("Zoning Law") require Special Use Permit and Site Plan Approvals from the Planning Board for new communication tower facilities. American Towers respectfully submits that the proposed communication tower facility meets the requirements for issuance of a Special Use Permit and Site Plan Approval.

Benefits of Reliable Wireless Service and the Need for the Proposed Communication Tower Facility

As this Board can appreciate, wireless communications have revolutionized the way we live, work and play. The ability to connect with one another in a mobile environment has proven essential to the public's health, safety and welfare. Just a few of the statistics regarding reliable wireless service usage illustrates how dependent we are on reliable wireless service. As of December 2016, there were an estimated 395.9 million wireless subscribers in the United States.[1] And, by December 2016, 50.8% of households in the United States had cut the cord and were wireless only.[2]

[1] CTIA's Wireless Industry Summary Report, Year-End 2016 Results, *available at https://www.ctia.org/industry-data/ctia-annual-wireless-industry-survey.*

[2] CTIA's Wireless Industry Summary Report, Year-End 2016 Results *available at available at* https://www.ctia.org/industry-data/ctia-annual-wireless-industry-survey *citing Early Release of Estimates from the National Health Interview Survey, National Center for Health Statistics*, June 2016-December 2016.

CUDDY +FEDER LLP

Wireless access has also provided a newfound form of safety. Today, approximately 70% of *all* 9-1-1 calls made each year come from a wireless device.[3] In 2014, wireless carriers in the U.S. voluntarily supported Text-to-911, a program that allows users to send text messages to emergency services as an alternative to placing a phone call.

Wireless access to the internet or "mobile broadband" has also grown exponentially since the arrival of the "smartphone" device. Annual wireless data usage in 2016 was reported at 13.7 trillion megabytes, which represents 35 times the volume of traffic in 2010.[4] In the agricultural world, wireless networks are also used by farmers to access real-time information about the conditions of their fields, the status and location of their equipment and to irrigate their crops to avoid over- and under-watering.[5]

Thus, wireless carriers, such as Verizon, over time have seen the public's demand for traditional cellular telephone services in a mobile setting evolve rapidly into a requirement for anytime-anywhere wireless connectivity with critical reliance placed on the ability to send and receive, voice, text, image and video at broadband speeds. More and more people rely on their wireless devices as their primary form of communication for personal, business and emergency needs.

The importance of reliable wireless service is demonstrated by the various federal and state laws and rulings regarding wireless services. Indeed, new wireless facilities such as the one proposed at this site are governed by the Telecommunications Act of 1996, which provides for a pro-competitive, de-regulatory national policy framework designed to accelerate private sector deployment of advanced telecommunications. Congress also encouraged and facilitated a seamless and reliable infrastructure for emergency communications including wireless communications through the Wireless Communications and Public Safety Act of 1999. And, in New York, Federal Communications Commission ("FCC")-licensed carriers are treated as public utilities for zoning purposes.[6]

The proposed telecommunication tower facility is needed by Verizon to meet this demand for reliable wireless services. This need is demonstrated in the Search Ring Justification Report prepared by Verizon's radio frequency (RF) engineer included in Exhibit B. This report includes RF propagation plots showing existing service in the area and the proposed service that will be provided

---

[3] Wireless 911 Services, FCC, *available at* http://www.fcc.gov/guides/wireless-911-services

[4] Id.

[5] *The Farmer and the Data: How Wireless Technology is Transforming Water Use in Agriculture*, prepared for CTIA Wireless Foundation; prepared by David Sunding, Martha Rogers and Coleman Bazelon, April 22, 2016, available at: *https://www.ctia.org/docs/default-source/default-document-library/ctia-wireless-foundation-green-agriculture-final.pdf*

[6] *See* Matter of Cellular One v. Rosenberg, 153 Misc.2d 302, 581 N.Y.S.2d 554 (Westchester Co. 1992), *aff'd*, 188 A.D.2d 648 (2d Dept. 1992), *aff'd*, 82 N.Y.2d 364 (1993) ("Rosenberg"); *see also* Omnipoint Communications, Inc. v. Town of LaGrange, 658 F.Supp.2d 539, 555 (S.D.N.Y. 2009).

by the proposed facility. The RF propagation plots in Attachments 1 and 4 show that Verizon's existing surrounding sites cannot provide reliable wireless services in this area of Town (light green areas on the plot). The dark green areas in the RF propagation plot in Attachment 4 demonstrates how the proposed telecommunication tower facility will meet the need for reliable wireless service (dark green area on the plot).

It is respectfully submitted that the enclosed Report demonstrates that the proposed telecommunication tower facility is needed by Verizon to meet the need for reliable wireless services in this area in compliance with Section 815.B (Supporting Documentation).

Sections 815.C: Shared Use of Existing Towers and/or Structures; 815.D: Shared Usage of Site with New Tower and 815.E; New Tower at New Location

The Search Ring Justification Report in Exhibit B along with the Site Selection Analysis in Exhibit C show that there are no existing facilities for co-location in the area where Verizon needs service and that the Premises is the most appropriate location for the siting of the proposed telecommunication tower facility. As detailed in the Site Selection Analysis, after determining that there were no co-location opportunities, American Towers' consultant identified 4 parcels as potential locations for the proposed facility. The Site Selection Analysis explains the selection of the proposed location at the Premises as the best location for the proposed facility.

Section 614. F: Future Shared Use of New Towers

The enclosed drawings prepared by Hudson Design Group detail how the proposed communication tower facility is designed to accommodate future shared use by other wireless service providers.

Section 815.G: Setbacks for New Towers

The large size of the Premises allows compliance with the required setbacks of Zoning Law Section 815.G. Sheet Number V-101 in the enclosed drawings show that the proposed communication tower is setback from all property lines a distance larger than the proposed tower height of 115'. The Zoning Information Table on Sheet V-101 indicates that the proposed compound complies with the setback requirements of the underlying LDR District.

Section 815.H: Visual Impact Assessment

Included in Exhibit D are photos and photosimulations depicting "before" and "after" views of the proposed tower from four viewpoints in the vicinity of the proposed communication tower facility. The photosimulations demonstrate that the proposed communication tower will not have an adverse visual impact due to the size of the Premises and location of the proposed tower on the Premises.

CUDDY +FEDER LLP

Section 815.I New Tower Design

Enclosed are drawings prepared by Hudson Design Group, LLC which detail the proposed telecommunications tower facility.

The proposed monopole tower will have a neutral gray finish which as shown in the photosimulations in Exhibit D will minimize any visual impact. In addition, no lighting or commercial signs are proposed.

As explained in the Search Ring Justification Report in Exhibit B, the proposed height of 115' is the minimum necessary to provide reliable wireless service in this area of Town. Also, as noted above and shown in the enclosed drawings, the proposed communication facility is designed to accommodate shared use.

Sections 815. J: Existing Vegetation and 815.K: Screening

Use of an existing paved driveway and an existing tractor path for access to the proposed facility minimizes clearing of existing vegetation.

Given the limited visual impact of the proposed facility, waivers of the screening requirements are requested.

Sections 815.L: Access and 815.M: Parking

The enclosed drawings detail the proposed facility access along an existing paved driveway and a dirt tractor path that will be upgraded to a 10' wide gravel access drive. The 100' x 100' lease area includes sufficient room for safe and adequate vehicle access, parking and circulation. A gravel parking/turn around area will be located right outside the equipment compound. Once the facility is constructed and operating, vehicle access will be limited to once per month for routine maintenance by a light duty truck or van.

Section 815. N: Fencing

The equipment compound will be completely enclosed by a fence seven (7) feet in height. Fence details are shown in the enclosed drawings. In addition, the wireless telecommunication facility will be monitored remotely 24 hours a day, 7 days a week.

Sections 815.O: Maintenance and/or Performance Bond and 815.Q: Removal of Obsolete/Unused Facilities

Given American Towers long-standing reputation of building long-term relationships with property owners and wireless tenants, as well as its extensive portfolio of towers, a waiver of the posing of a

CUDDY +FEDER LLP

performance bond is respectfully requested. American Towers agrees to remove the facility in the unlikely event it becomes abandoned.

Conclusion

The following materials are respectfully submitted in support of this Special Use Permit and Site Plan Application for a communication tower facility:

Exhibit A:	Copy of the Application for Zoning/Building Permit, Copy of the Site Plan/Special Use Permit Application Form, Agricultural Data Statement, and Cover and Signature Pages of the Lease between the property owner, Keith Feitshans and American Towers
Exhibit B:	Search Ring Justification Report
Exhibit C:	Site Selection Analysis Report
Exhibit D:	Visual Materials Including Photosimulations
Exhibit E:	RF Safety Compliance Report prepared by and certified by Paul Dugan, P.E.
Exhibit F:	Long Environmental Assessment Form

Also enclosed are drawings prepared by Hudson Design Group, consisting of sheets T-1, GN-1, V-101, V-102, C-1, C-2, A-1 through A-6, E-1, G-1 and G-2, last dated November 29, 2017.

Additionally, a check made payable to the Town of Darien in the amount of $60, representing the application fee and the public notice fee is also enclosed.

CUDDY +FEDER LLP

Thank you for your consideration of American Towers' Applications. Should you have any questions or need additional copies of these application materials, please do not hesitate to contact me. We look forward to discussing American Towers' proposal with the Planning Board at its next available meeting.

Very truly yours,

Lucia Chiocchio

Lucia Chiocchio

Attachments

cc: Michael Eacho, Project Manager, Northeast
Ed Lutz, Senior Manager, Northeast
Doug Morrison, Pyramid Network Services
Colin Fazio, Pyramid Network Services
Steve Elsbree, Pyramid Network Services
Tom Irwin, Pyramid Network Services
Andrey Tsikanovsky, Hudson Design Group

EXHIBIT A

TOWN OF DARIEN APPLICATION FOR ZONING PERMIT

Today's Date: 12/29/17 Application Number: _____

Applicant's Name: American Towers LLC

Address: 10 Presidential Way, Woburn MA 01801

Phone Number: (866) 586-9377 Tax Map #: 1-1-37.2, 2-1-9.2

Address of Project: 9657 Fargo Road, Corfu, NY 14036

INSTRUCTIONS:
Please read the instructions carefully before completing the application form. Fill out the application form completely, using ball point pen or a typewriter. Submit your application form & required attachments (list of such on this form) to the Zoning Enforcement Officer (ZEO) prior to commencing this project or use.
***THIS APPLICATION IS NONTRANSFERABLE AND IS VALID FOR ONE YEAR PERIOD ONLY**

1. Zoning District property located in: RESIDENTIAL (X Low or __ Medium Density)
   __ Industrial __ Commercial __ Recreational
2. Permit Application for: __ New Construction __ Addition __ Alteration __ Relocation
   __ Accessory Structure __ Home Occupation X **SPECIAL USE PERMIT**
   __ **VARIANCE** X **SITE PLAN REVIEW** __ **TEMPORARY USE**
3. Is this parcel: __ Corner Lot __ Water District __ Sewer District
4. Dimensions of this lot: _____length **X** _____width and/or area 111 acres
5. What is the front set back (in feet) from the project to the street right-of-way (Check Survey for ROW); 296 ft and what is the set back (in feet) from project property line Side A 1385 Side B 811 Back 2357 (Also depict on plot diagram).
6. Total percentage (%) of coverage of all buildings on lot (including proposed): _____%
7. Total Dwelling Units: none proposed
8. Project Cost: _____ Actual ____ Estimated ____
9.

PROPOSED PROJECT	HEIGHT	LENGTH	WIDTH	SQUARE FEET
House				
Garage/Pole Barn				
Accessory Structure				
Commercial tower	115'	75'	75'	5625 fenced equipment compound
Industrial				
Signs				

Bathrooms: ____
Bedrooms: ____
Rec Room: ____
Family Room: ____
Fireplace: ____

Describe proposed project and/or use: Wireless communications tower facility.

CERTIFICATION: I hereby certify that I have read the instructions, examined this application and supporting attachments and know them to be true & correct. All provisions of Laws and Ordinances covering this type of work or use will be complied with, whether specified herein or not. The granting of a permit does not give authority to violate or cancel the provisions of any other State or Local Law/Ordinance regulating construction, performance or use.

By: _____
APPLICANT SIGNATURE (must sign in presence of ZEO)
Margaret Robinson, Senior Counsel at American Towers, LLC

Kenneth L. Tuttle
PROPERTY OWNER SIGNATURE (If other than applicant)

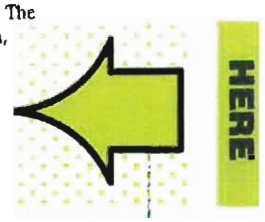

Attachments required & verified by ZEO: _____

_____

Action taken by ZEO: **APPROVED:** ☐ **DENIED:** ☐ Reason: _____

_____

Referral To: ☐ Town Planning ☐ Town Appeals ☐ County Planning ☐ Building Inspector

Date of Signature		Signature of ZEO
Date of Signature	# of Inspects	Signature of Building Inspector
Date Fee Received	Fee	Indicate Fees Paid/Town Clerk Use Only
Date of Signature		Renewal Approval / ZEO Signature

This application will not be considered complete until all appropriate attachments have been supplied and accepted; photo-copies are acceptable. The applicant is responsible to present all applicable attachments to the ZEO. The project in question can not be started until an approved Zoning Permit has been issued, the Building Inspector contacted and if required, the Town Clerk has issued the Building Permit. The applicant is responsible to make all calls to the Building Inspector for review of plans and inspection assignments and to pay any necessary fees as set forth in the appropriate schedule of fees to the Town Clerk.
If a Site Plan is necessary, a total of nine (9) copies are needed.

Please be advised that you may contact the following if you have any questions or concerns with regard to procedures:
*ZEO – Filling out or filing Zoning Permits, Zoning Regulations, appointments for Zoning Permit approval, Variance & Special Use Procedures.
*Building Inspector – Construction, Plan review, Code requirements and inspections
*Town Clerk – Forms, Fees (payable to Town Clerk), Building Permit, General Information & who to contact.

ATTACHMENTS:
The following attachments are mandated for all projects or uses in question.
*Layout sketch (Plot Diagram) shall consist of an accurate map (survey or plot diagram on graph paper) showing all structures and/or buildings on the parcel. All dimensions of project, property lines and right-of-ways shall also be indicated. Identify adjoining parcels and indicate the owners of such.

Please contact the ZEO regarding which of the following attachments will be required for the project or use in question:

1. Graphic material showing traffic circulation, parking spaces, pedestrian walks, topography and landscape plans, open space & buffer zone.
2. Preliminary engineering plans showing street improvements, storm drainage, water supply and sanitary sewer facilities.
3. Copy of current Genesee County Health Department approval for an individual sewer disposal system and plans for such.
4. A drawing of any signs which the applicant wishes to post. This drawing shall include dimensions, characters, shape, and illumination (if any, show source of power & location of illumination).
5. Elevation drawings with applicable height dimensions.
6. Description of the nature of existing use.
7. Freshwater wetland determination and/or permit, from NYS Dept of Environmental Conservation.
8. Certification indicating specific elevations in relation to the Federal Flood Hazard Area.
9. Letter of review from the Department of Soil and Water Conservation when applying for a pond.

Other:

_____

_____

PLEASE SEE ATTACHED

DRAWINGS

TOWN OF DARIEN
GENESEE COUNTY, NEW YORK 14040

PLANNING BOARD
SITE PLAN REVIEW
SPECIAL USE PERMIT APPLICATION

Application #: _____ (For office use only)

Today's Date: 12/29/17

Provision of Zoning Law Involved:
Article: 7, 8, Section: 701, 815, Subsection: _____, Paragraph: _____

Purpose of Request:

*This request would be in harmony with the orderly development of the district in which it is located because: Please see cover letter & enclosed exhibits.

*This request would not be detrimental to the property or persons in the neighborhood because: Please see cover letter & enclosed exhibits

*This request would not increase the traffic flow in the area to the extent that traffic safety would be endangered because: Please see cover letter & enclosed exhibits

The applicant should submit one (1) copy of the application, nine (9) copies of the site plan and one (1) copy of the zoning application

CERTIFICATION:

I hereby certify that I have read the instructions and examined this application and supporting attachments and know the same to be true and correct. All provisions of laws and ordinances covering this type of work or use will be complied with whether specified herein or not. The granting of a permit does not presume to give authority to violate or cancel the provisions of any other state or local ordinance regulating construction or performance of construction.

12/15/2017
Date of Signature

Signature of Applicant Margaret Robinson Senior Counsel of American Towers LLC

12-19-17
Date of Signature

Kenneth L. Fairbanks
Signature of Owner (If different from Applicant)

Office Use Only:
Zoning Permit Application #: _____ Date Received: _____ Fee Paid: _____
Date of First Hearing: _____ Location: _____
Date of Second Hearing: _____ Location: _____
Date of Subsequent Hearings: _____ Location: _____
Action: (___) APPROVED (___) REJECTED Date: _____
Planning Board Chairman Signature: _____
Zoning Officer Signature: _____ Date Permit Issued: _____
Additional Conditions Imposed: _____

TOWN OF DARIEN

Agricultural Data Statement

Application # _____

Date _____

INSTRUCTIONS: This form must be completed for any application for a special use permit, site plan approval, use variance or a subdivision approval, requiring municipal review, that would occur on property within 500 feet of a farm operation located in a NYS Dept. of Ag. & Markets certified Agricultural District.

Applicant		Owner if different than Applicant	
Name	American Towers LLC	Name	Kenneth L. Feitshans
Address	10 Presidential Way	Address	9657 Fargo Road
	Woburn, MA 01801		Corfu, NY 14036

1. Type of application: Special use permit [X]; Site plan approval [X]; Use variance [ ]; Subdivision approval [ ]
2. Description of proposed project: Wireless telecommunications tower facility and unmanned equipment compound
3. Location of project: Address 9657 Fargo Road
   Tax Map Number (TMP) 1-1-37.2
4. Is this property within an Agricultural District ? NO [ ] YES [ ]
5. If yes, Agricultural District Number _____
6. Is this property actively farmed ? NO [ ] YES [ ]
7. List all farm operations within 500 feet of your property, (Attach additional sheets if necessary).

Check with your local Assessor if you do not know

1.	2.
Name: Kenneth L. Feitshans	Name: Robert Miles
Address: 9657 Fargo Road	Address: 9564 Fargo Road
Corfu, Y 14036	Corfu, NY 14036
Is this property actively farmed ? NO [ ] YES [X]	Is this property actively farmed ? NO [ ] YES [X]

3.	4.
Name: Wendy Schmidt	Name:
Address: 9669 Fargo Road	Address:
Corfu, NY 14036	
Is this property actively farmed ? NO [ ] YES [X]	Is this property actively farmed ? NO [ ] YES [ ]

By: [signature] Margaret Robinson — Signature of Applicant Senior Counsel of American Towers LLC

[signature] Kenneth L. Feitshans — Signature of Owner (if other than Applicant)

REVIEWED BY _____ Signature of Municipal Official _____ Date

NOTE TO REFERRAL AGENCY: County review is required. A copy of the Agricultural Data Statement must be submitted along with the referral to the County Planning Department.

Copy Distribution: WHITE- Z.E.O. CANARY-Planning Board PINK-Board of Appeals GOLD-Applicant

Site Name: Corfu NY
Site Number: 201958

LEASE AGREEMENT

THIS LEASE AGREEMENT ("***Agreement***") is made effective as of the date of the latter signature hereof (the "***Execution Date***") and is by and between Landlord and American Tower.

RECITALS

A. WHEREAS, Landlord is the owner of that certain parcel of land (the "***Property***") located in the County of Genesee, State of New York, as more particularly described on Exhibit A;

B. WHEREAS, Landlord desires to grant to American Tower an option to lease from Landlord a portion of the Property (the "***Compound***"), together with easements for ingress and egress and the installation and maintenance of utilities (the "***Easement***" and together with the Compound, the "***Site***") both being approximately located as shown on Exhibit B; and

NOW, THEREFORE, in consideration of the mutual covenants and agreements herein contained, and other good and valuable consideration, the receipt, adequacy and sufficiency of all of which are hereby acknowledged, the parties hereto hereby agree as follows:

1. **Business and Defined Terms**. For the purposes of this Agreement, the following capitalized terms have the meanings set forth in this Paragraph 1.

(a) ***American Tower***: American Towers LLC, a Delaware limited liability company d/b/a Delaware American Towers LLC

(b) ***Notice Address of American Tower***: American Towers LLC
c/o American Tower Corporation
10 Presidential Way
Woburn, MA 01801
Attn: Land Management

with a copy to: American Towers LLC
c/o American Tower Corporation
116 Huntington Ave.
Boston, MA 02116
Attn: Law Department

(c) ***Landlord:*** Kenneth L. Feitshans

(d) ***Notice Address of Landlord:*** 9657 Fargo Road
Corfu, NY 14036

(e) ***Initial Option Period***: One year

(f) ***Renewal Option Period(s)***: One (1) period of one (1) year.

(g) ***Option Period***: The Initial Option Period and any Renewal Option Period(s)

Site Name: Corfu NY
Site Number: 201958

IN WITNESS WHEREOF, Landlord and American Tower have each executed this Agreement as of the respective dates written below.

LANDLORD:
Kenneth L. Feitshans

Kenneth L. Feitshans
Name: Kenneth L. Feitshans

Date: 2-15-17

STATE OF NEW YORK
COUNTY OF ERIE

I, a Notary Public of the County and State aforesaid, certify that Kenneth L. Feitshans came before me this day and acknowledged the execution of the foregoing instrument.

Witness my hand and official stamp or seal, this 15TH day of FEBRUARY, 2017.

[Affix Notary Seal]

Laura A. Bradley
Notary Public
My commission expires:

MARCH 28, 2017

LAURA A. BRADLEY
Notary Public, State of New York
Qualified in Erie County
My Commission Expires March 28, 2017

Site Name: Corfu NY
Site Number: 201958

AMERICAN TOWER:

American Towers LLC, a Delaware limited liability company d/b/a Delaware American Towers LLC

By: _____
Name: Shawn Lanier
Title: Vice President - Legal

Date: 3-23-2017

COMMONWEALTH OF MASSACHUSETTS)
) ss:
COUNTY OF MIDDLESEX)

On the 23rd day of March, 2017, the undersigned notary public, personally appeared Shawn Lanier, proved to me through satisfactory evidence of identification, which were ***personally known***, to be the person who name is signed on the preceding or attached document, and acknowledged that he/she signed it voluntarily for its stated purpose, as VP of Legal, of American Towers LLC, a Delaware limited liability company d/b/a Delaware American Towers LLC, before me.

CHRISTOPHER A. LEVERONE
Notary Public
COMMONWEALTH OF MASSACHUSETTS
My Commission Expires
August 20, 2021

_____
Notary Public Christopher Leverone
My Commission Expires: 8/20/21

EXHIBIT B

verizon

Bell Atlantic Mobile Systems of Allentown, Inc. d/b/a Verizon Wireless

Corfu Site

9657 FARGO ROAD
CORFU, NEW YORK 14036

Search Ring Justification
JULY 3 , 2017

SEARCH RING JUSTIFICATION

Bell Atlantic Mobile Systems of Allentown, Inc. d/b/a Verizon Wireless submits this RF analysis in association with its proposed wireless communications facility to be located in Corfu, New York, also known as the "Corfu" cell site.

1. QUALIFICATIONS

This report was prepared by Verizon Wireless' in-house RF Engineering Department, which consists of experienced and properly credentialed radio frequency engineers. The RF Engineering Department designs Verizon Wireless' nationwide network to provide adequate and effective wireless communications services in compliance with all FCC requirements, including Verizon Wireless' licensure requirements. The RF Design Engineers use proprietary software and tools in addition to industry-standard RF propagation modeling and network performance simulation programs to identify network coverage, performance and capacity deficiencies, and develop and implement solutions based on these analyses with the goal of maximize network performance and efficiency.

2. WIRELESS TELECOMMUNICATIONS SYSTEMS

The FCC licenses a specific amount of RF spectrum to each wireless carrier and stipulates that each carrier efficiently use that spectrum to provide adequate wireless communication services to emergency services, businesses and individuals in the licensed areas. Wireless carriers achieve this mandate by continuously reusing the allocated radio frequencies throughout their licensed service area. This is accomplished by building small radio base stations, or cell sites, in a particular pattern (also known as a grid). The application of the grid concept affords a wireless carrier the ability to effectively and efficiently plan the reuse of radio frequencies. Indeed, it is the only way a cellular system can adequately function. Following proper planning techniques (as originally defined by Bell Labs and further refined by the wireless industry), the same radio frequency is reused at reasonably close intervals throughout the licensed area, without causing harmful interference (noisy or dropped calls or the inability to originate a call are typical manifestations of harmful interference), but only if placed properly. There is extremely limited flexibility as to where a cell site can be located, and limited flexibility as to the proper height.

When designing a wireless network, an RF Design Engineer starts with a theoretical grid pattern and applies it to the licensed area. Each licensed area has many variables that can affect the design and must be considered. These variables include terrain features, use of existing structures, traffic distribution, and many others. In order to provide effective coverage while maintaining an appropriate frequency reuse plan, the RF Design Engineer must perform a balancing test of all applicable technological variables. The primary variables that the engineer must balance and take into consideration are the location and the antenna centerline height of the cell sites. If sites are too far apart calls are frequently dropped. If a cell site is too low it will not provide adequate coverage. Sites being located too closely together result in excessive overlap (interference). If a cell site is too tall it will have increased coverage but will cause interference throughout the rest of the nearby wireless network. These last two scenarios would cause significant, negative effects on the network efficiency.

Therefore, a properly designed wireless network design begins with strategically located cell sites. At each cell site there is a building, tower, water tank or other structure on which antennas are mounted. Typically, radio-transmitting equipment (base station) is located at the base of the structure. Radio signals leave the base station and travel through transmission lines

to the antennas or to fiber optic cable to the remote radio head (RRH) at the top of structure and then to the antennas. Radio signals are broadcast through the antennas and travel to the customer's wireless device, thereby connecting a call. When a wireless customer transmits back to the cell site, the signal is received by the antennas, travels back through the transmission lines and is received by the base station. The base station then converts the signal into digital data and combines it with all the other wireless calls and digital traffic at that cell site. This accumulation of data is then sent over fiber optic digital lines (or microwave when Fiber optic cable is unavailable) back to the main switching processors. The main switching processors or Mobile Switching Center (MSC) is interconnected to the national Public Switched Telephone Network (PSTN) and Internet service providers where calls are routed to other wireless, land-line phones, or Internet locations.

As this technology enables mobile calling, once a wireless call is originated and the customer travels away from the cell site of origination, the system tracks the changes and begins a process of determining if there is a dominant server ("better serving cell site"). Upon determination of a stronger serving site, the system automatically switches the wireless customer over to the new cell site. This process is known as a handover and allows for seamless coverage within a wireless carrier's service area. By design, this process is supposed to happen so quickly, the wireless customer does not perceive it. If the network is designed properly, there is no interruption of service and connection quality remains adequate. Proper, effective RF design requires the location (and height) of cell sites in fairly rigid parameters.

3. PERFORMANCE METRICS

(a) Coverage

The critical issue for Verizon Wireless is the provision of "adequate and substantial" Radio Frequency service to serve its wireless customers. The wireless industry is governed by the Rules of the FCC. The FCC mandates in CFR 47, Parts §22.940 and §24.16 that each carrier must provide "substantial service" in its licensed service area, or risk having their license revoked. The FCC defines "substantial service" as service which is sound, favorable, and substantially above a level of mediocre service. Similarly, New York State law, recognizing the importance of deploying the infrastructure for wireless communications, has deemed cellular transmitting facilities to be public utilities for purposes of zoning. As such, the facilities must be permitted in order to provide "safe and effective" service.

A metric called Reference Signal Received Power ("RSRP") can be used to specify the coverage capabilities of wireless networks. This standard accurately represents the Long-Term Evolution ("LTE") data technology (typically known as 4G) being utilized as well as the Voice-Over LTE ("VoLTE") technology. VoLTE is being deployed on 4G LTE to augment and ultimately replace Verizon Wireless' legacy CDMA wireless voice capacity. RSRP is the average received power measured across an LTE broadband channel reference signal.

RSRP is measured in units of "decibels" referenced against 1 milliwatt, or dBm. The decibel is a logarithmic unit that allows ratios to be added or subtracted. The definition formula for decibels referenced against 1 milliwatt is $dBm = 10\log(P / 1mW)$ with P measured in milliwatts. So 10 mW would be 10dBm, 100 mW would be 20dBm, etc.

The service boundary of a 4G LTE site can be defined by equating an adequate receiver signal threshold in RSRP measurement. This value is derived from industry standards, 4G LTE receive signal levels, quality, acceptable signal to noise ratios, and along with statistically quantifiable variations in terrain. This threshold must also take into account additional losses associated with location of the mobile user.

Verizon Wireless must provide adequate service to all of its users. In order to account for users within buildings, additional margin must be added to RSRP so that adequate coverage exists indoors. Industry and Verizon Wireless engineering standards include an additional 10dB of margin to RSRP to be used for light suburban areas, with increasing values for higher density land usage. This additional margin is also required for in-vehicle service specifically to account for increased attenuation associated with the use of hands-free headsets, where the phone is typically placed on the seat or in the center console.

An industry standard, computer-aided, RF engineering tool is used in the design of wireless networks. This tool is used to generate predictions of RSRP that show underlying geographic data (highways, arterial roads, terrain, trees, etc.). The propagation map is calculated showing the region where the RSRP equates to the minimal acceptable received signal level for adequate service, as measured by the device's receiver. The propagation map depicts the RSRP of the surrounding environment including the attenuation of in-building and in-vehicle use of service and visually demonstrates existing coverage patterns. Plots are also generated to demonstrate the combination of the existing and proposed coverage patterns.

With the preceding in mind, Verizon Wireless' network standard for reliable 4G LTE wireless service for highway and rural settings is -105 dBm RSRP. Network reliability and accessibility decreases dramatically for mobile devices operating in or traveling into RF environments outside (or weaker than) the -105 dBm RSRP coverage boundary (represented as white space in provided coverage plots). Similarly, and as described above, -95 dBm RSRP is used in areas where additional signal strength is needed to penetrate into buildings (e.g., city centers, dense residential, commercial and industrial type morphologies).

In addition to the sites seen on the propagation maps there is typically a coverage impact from more-distant, neighboring sites. These sites' coverage is taken into account even though the sites are not seen on the map.

(b) Capacity

Significant deficiencies in service can occur in Verizon Wireless' telecommunication network in and around the existing sites. These deficiencies can be a result of capacity demands that are taxing the surrounding sites in the Verizon Wireless network. The FCC mandates in CFR 47 Part §22.940 that when a Commercial Mobile Radio Service ("CMRS") licensee (i.e. "wireless carrier") is up for renewal, the carrier must demonstrate its proposal for expanding system capacity in a coordinated manner in order to meet anticipated increasing demand for both local and roamer service, or be at risk of license revocation.

Verizon Wireless regularly monitors customer traffic on each site in its network and identifies which sites are reaching 4G LTE capacity limits or are projected to reach these limits over a rolling two-year window. Capacity is defined as the amount of customer data traffic (voice and data) a given site can process before significant performance degradation occurs. Performance issues include an inability to access the network (make a call), calls being abruptly dropped from the network (dropped calls), or poor call or data throughput performance while connected to the network (delayed upload or download speeds). Data volume, or throughput, is the main factor used to determine the existing 4G LTE capacity for a given site and to project when that site is expected to run out of capacity (i.e., reach a point where it can no longer process the volume of data requested by local wireless devices). Capacity relief solutions, typically development of additional sites capable of "offloading" the "loaded" sites, are then required to solve the problem.

Forward Data Volume ("FDV"), a measure of usage (data throughput) on a particular site over a given period of time, is a performance metric used to evaluate the capacity of an existing facility. The "forward link" is used since there is generally more data being downloaded[1] (or transmitted) from a given site to the mobile devices within its coverage area, than uploaded. Therefore, it is the "forward link", not the "reverse link" that is typically used to determine the capacity limitations. Spikes resulting from anomalies such as seasonal events (tourist spikes, major outdoor concert venues or sporting events, etc.), college breaks, holiday sales events or celebrations, and major accidents or emergencies are accounted for as they can inflate the capacity demand and result in a premature capacity offload prediction. Trending actual and recorded throughput data over time for a site and comparing it to the theoretical maximum throughput capabilities for that site determines when that site will require capacity relief. Another metric commonly used to determine level of usage on a specific LTE site is Physical Resource Block Utilization ("PRBU"). This can be described as the percentage of resource blocks being used on an LTE site. As PRBU approaches 100%, users can gradually notice degraded service.

The above are some of the concepts and parameters used when determining adequacy of the existing network.

4. PERFORMANCE SOLUTIONS

When the Verizon Wireless Radio Frequency Engineer identifies coverage gaps in the system or sites that have or will reach data capacity exhaustion, they issue a "search area." A search area is a geographical area located within the inadequately serviced area, and it is designed such that if a wireless telecommunications facility is located within the search area, and at an appropriate height, it will likely provide the required coverage. For the most part, locations outside of the search area will fail to provide adequate service to the cell. Due to technological constraints, there is limited flexibility as to where a new facility can be located, and still function properly. The goal of the search area is to define the permissible location for placement of a cell site that will provide adequate service in the subject cell, and also work properly as part of the overall network.

5. VERIZON WIRELESS SERVICE IN THE CORFU CELL

(a) Character of the Area

The character and land use of the area around the Corfu Cell is generally rural and relatively flat with elevation dropping towards the north. The current problem experienced by Verizon Wireless and its subscriber base in this area is capacity exhaustion on its low band (700 MHz) LTE channels and the inability of its high band (PCS/AWS or 1900/2100 MHz) channels to offload that capacity exhaustion due to a gap in coverage at these higher frequencies. The existing LTE sites and coverage can be seen in **Attachment 1** to this letter.

(b) RF Coverage Issues

The network was analyzed to determine whether there was sufficient RF coverage and found that there was a gap in adequate LTE coverage for Verizon Wireless in the AWS frequency band. As shown in the calculated coverage map in **Attachment 1**, there is an AWS LTE coverage gap of approximately 9.735± Square miles from Mein Road all the way south to Genesse Street / Route 33 and immediately surrounding the search ring location to the south and along Fargo Road/ Route 4 and into the homes and farms across the targeted service improvement area. When viewing the map in **Attachment 1**, the blue layer represents the area

[1] By comparison the reverse link, or information transmitted from mobile devices to an associated wireless facility, generally carries in the order of 1/10th of the data volume as the forward or downlink path.

that is currently served at an adequate level (-105 dBm RSRP for a rural targeted service improvement area). The areas in white are below the adequate threshold of reliable LTE high speed voice and data services. The proposed site will remedy the existing coverage gap and provide Verizon Wireless with adequate coverage for the Corfu Cell.

(c) RF Capacity Issues

In addition to the coverage deficiencies, Verizon Wireless's network does not have sufficient capacity to handle the existing and projected LTE voice and data traffic in the area near and neighboring the proposed Corfu facility ("targeted service improvement area"). Therefore, the proposed Corfu facility is also needed to provide "capacity relief" to the existing nearby Verizon Wireless sites so that the proposed and neighboring sites are able to adequately serve the existing and projected capacity demand in the area. Unless addressed, Verizon Wireless subscribers will experience loss of service and/or significant service degradation in this area. This rural area of Corfu is comprised of a great majority of flat agricultural fields mixed with some treed areas some low varying terrain, patches of dense vegetation, and other signal attenuating clutter. All existing neighbor cell sites are either too distant and/or are at or quickly approaching their respective capacity limitations to effectively serve the Corfu targeted service improvement area. Verizon Wireless' Pembroke DB facility (located 3.71± miles northeast of the proposed site) is at its capacity limit and is in dire need of capacity relief. The proposed location must provide capacity relief to the existing Verizon Wireless Pembroke DB site. Without this capacity relief, Verizon Wireless subscribers will experience degraded service as described above.

As indicated previously, trending actual and recorded throughput data over time for a site and comparing it to the theoretical maximum throughput capabilities for that site determines when a site will require capacity relief. These trends, specifically for the Pembroke DB site, are visually represented on the Verizon Wireless FDV Data Chart (**Attachment 2**). The red line indicates the capacity limit for the sites. The trend line shown in gold represents the expectation where LTE traffic continues to grow similarly to historical subscriber and usage growth on the system. LTE traffic growth includes rapid subscriber migration from EVDO (3G) capable devices to 4G LTE devices, as well as the transition from CDMA Voice to VoLTE.

As the results in **Attachment 2** illustrate, the actual (blue line) and normalized (green line) data volume trends quickly approaching the plateau at the theoretical maximum (red line) for the Pembroke DB site. In order for the local network to provide increased capacity for the currently demonstrated and projected doubling of resource block utilization/data volume through the Pembroke DB facility, capacity relief is required. As mentioned previously, other neighboring Verizon Wireless sites in the area are suffering similar capacity constraints. Even if these surrounding sites could be upgraded or modified to provide acceptable coverage to the targeted service improvement area, they also do not have sufficient remaining capacity to offload Pembroke DB to an appreciable extent (given the current usage and projected usage growth). In order to solve the existing and growing capacity demand in the area, a new facility is required. The proposed Corfu site will provide the necessary localized and dominant serving wireless facility that improves RF service across all Verizon Wireless owned frequency bands. This will in effect offer in the order of a two-fold capacity improvement across the target area.

(d) Solution

A search area was developed based on the problems identified above, and as shown in **Attachment 3**. This is the geographical area within which a new wireless telecommunications facility would provide the required coverage (built at an appropriate height). In this case, the search area parameters are generally, close to Genesee Street /Route 33 and Fargo Road /

Route 4 and area with relative higher ground elevation to reduce the tower height. In most cases, locations outside of the search area will fail to provide adequate service to the targeted service improvement area while locations within are likely to meet the site's objectives (built at an appropriate height).

6. PROPAGATIONS

The propagation map, **Attachment 1** (Verizon Wireless Existing Sites Coverage), depicts service from the closest existing sites without the proposed site. The map demonstrates that there are coverage gaps from south of Interstate 90, along South Lake Road, past Genesee Street /Route 33 and south of the proposed Corfu site .

Attachment 4 is a propagation map titled Verizon Wireless Coverage with Corfu Site and it depicts the service from the closest existing sites along with coverage from a potential Corfu site. The proposed cell site will provide adequate service to the target objective area in this cell.

7. CONCLUSIONS

Verizon Wireless has prepared an analysis of the existing cell sites and its network's respective RF coverage. With the existing sites at the current configurations there is a substantial gap in service which restricts Verizon Wireless customers from originating, maintaining or receiving reliable calls from the "PSTN" for VoLTE calls. It is our expert opinion that most locations within the search area which are located at an appropriate and technologically feasible height will satisfy the coverage and capacity needs of Verizon Wireless and its subscribers in this portion of Corfu in the Town of Darien. The proposed location depicted herein satisfies the service gap and is proposed at the minimum height necessary for adequate service.

In addition, the overall system plan for Verizon Wireless in the Town of Darien is sound and consistent with industry standards and practices.

Patrick Makubire

Patrick Makubire
Verizon Wireless
RF Design Engineer

ATTACHMENT 1
VERIZON WIRELESS COVERAGE
EXISTING SITES

AWS COVERAGE AWS -105 dBm RSRP - 105 dBm

Existing = Blue

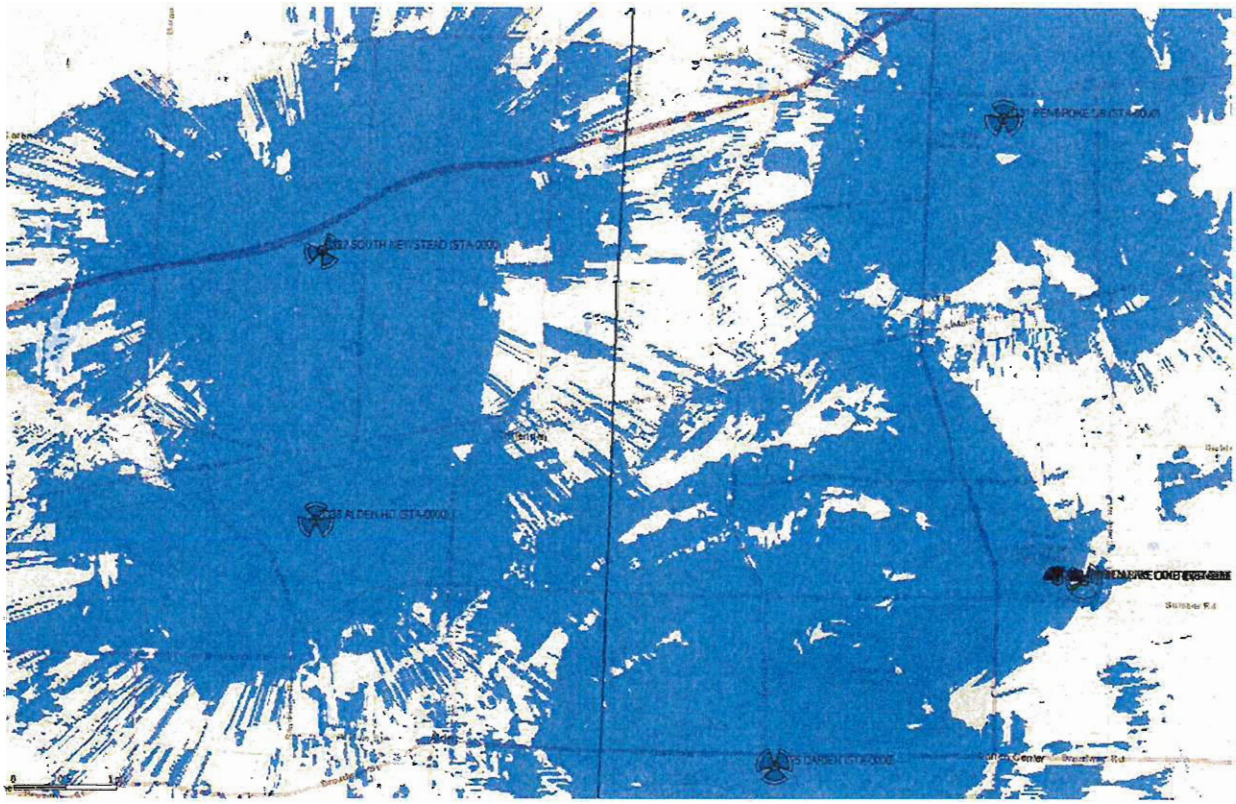

Attachment 2
Verizon Wireless FDV Data Chart – Pembroke DB

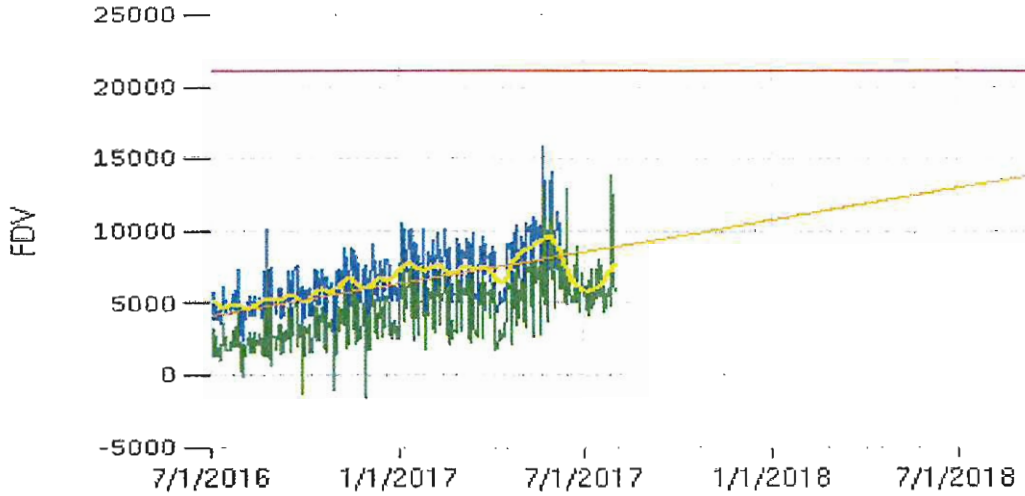

Attachment 3
Verizon Wireless Corfu Search Area

ATTACHMENT 4
VERIZON WIRELESS COVERAGE WITH "CORFU" SITE
AWS Service: -105 dBm RSRP:

Existing = Blue , Green = Corfu – Proposed at 110' ACL

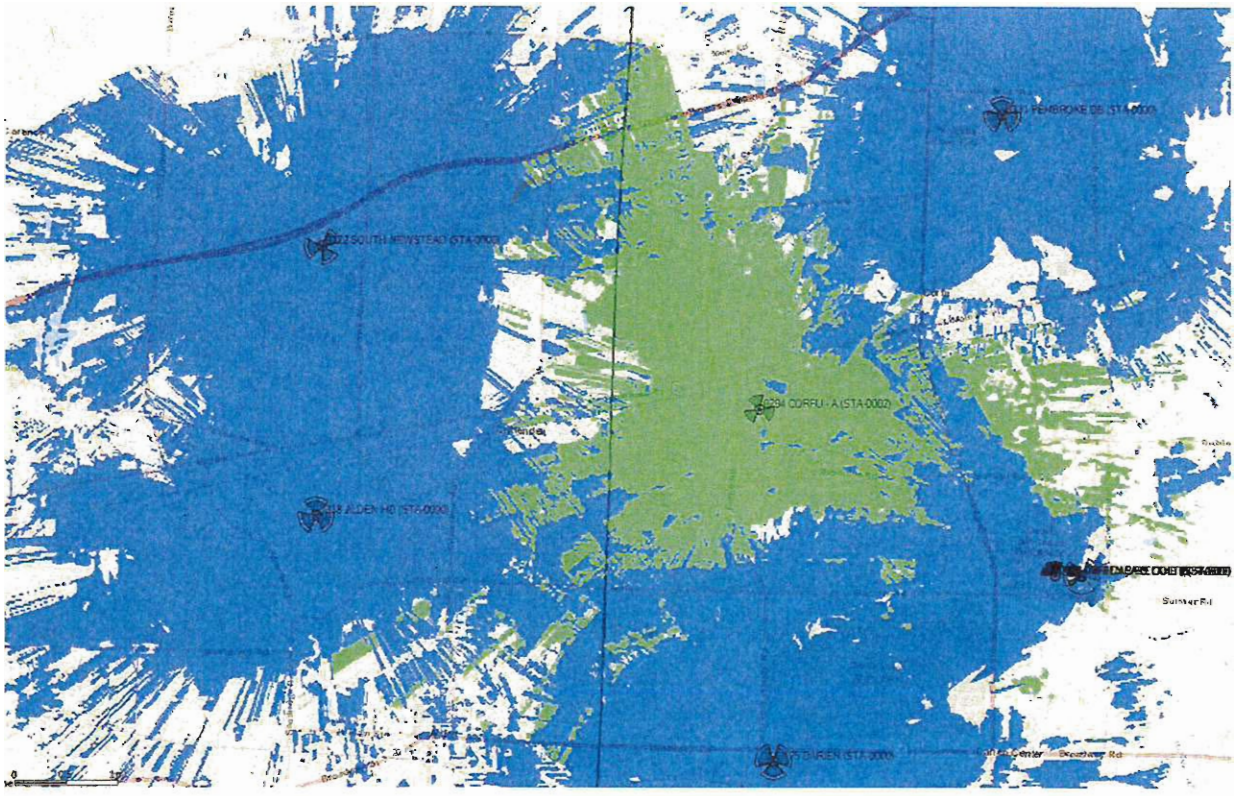

EXHIBIT C

BELL ATLANTIC MOBILE SYSTEMS OF ALLENTOWN, INC. d/b/a VERIZON WIRELESS

CORFU SITE

9657 FARGO ROAD
CORFU, NEW YORK 14036

SITE SELECTION ANALYSIS
JULY 25, 2017

Verizon Wireless
1275 John Street, Suite #100
West Henrietta, New York 14586

SITE SELECTION ANALYSIS

Verizon Wireless proposes to install and operate a new wireless telecommunications facility, including a new structure, associated antennas, equipment shelter and related appurtenances, off of Fargo Road, in the Town of Darien, Genesee County, New York. The property, which is located in the Town of Darien, is currently a 46.3 Acre agricultural field, owned by Kenneth L Feitshans.

1. NEED FOR FACILITY

(a) Problem

The process of identifying a technologically appropriate location, as well as the need for this communications facility are as provided in the **RF SEARCH RING JUSTIFICATION**. As indicated in that report, when a Verizon Wireless Radio Frequency Engineer identifies coverage gaps in the system or sites that have or will reach data capacity exhaustion, they issue a "search area." A search area is a geographical area located within the inadequately serviced area, and it is designed such that if a wireless telecommunications facility is located within the search area, and at an appropriate height, it will likely provide the required coverage. For the most part, locations outside of the search area will fail to provide adequate service to the cell. Due to technological constraints, there is limited flexibility as to where a new facility can be located, and still function properly. The goal of the search area is to define the permissible location for placement of a cell site that will provide adequate service in the subject cell, and also work properly as part of the overall network.

(b) Solution

A search area was developed based on the problems identified in the **RF SEARCH RING JUSTIFICATION** and is attached herein as **Attachment 1.** This is the geographical area within which a new wireless telecommunications facility is likely to provide the required coverage (at an appropriate height). In this case, the search area parameters are, generally oval shaped with the parameters running 0.44 $\pm$ miles from south of Genesee Street / Route 33 encompassing Candidate A, B and D to the southern end of these properties of Ken Feitshans and Wendy Schmitt .The search ring also runs from west to east 0.76$\pm$ miles , from Fargo Rd / Route 4 to the eastern end of the property line of Candidate C . Again, for the most part, locations outside of the search area will fail to provide adequate service to the cell while locations within are likely, but not guaranteed, to do so.

The existing LTE sites and their adequate coverage (-105dBm RSRP) can be seen in **Attachment 2** to this report.

2. SEARCH RING ANALYSIS

(a) Geography & Topography

The Corfu Cell is an agricultural parcel surrounded by mainly other agricultural parcels with a few residential homes, one being the landowner Mr Feitshans

(b) Land Use

The Search Ring is made up of mostly other agricultural properties. There are a few residential homes sporadically located throughout the area. **Attachment 3** is an overlay of the Search Ring and the tax map on an aerial photograph of the area.

3. ZONING CONSIDERATIONS

(a) Collocation

Verizon Wireless routinely seeks to install its antennas and equipment on an existing communications towers or other tall structures ("collocation"), whenever feasible. Local communities universally favor Collocations because they can minimize the number of wireless telecommunications towers in an area and many municipalities even provide for a streamlined application review process. Collocation is often listed as the highest siting priority in a local municipality's Zoning Law. In addition to the streamlined zoning application process, collocation is preferred by wireless providers because it is generally a less expensive and more efficient option, compared to installation of a new tower facility.

(b) New Structure on Municipally-owned Property

As its next priority, Verizon Wireless generally seeks to locate wireless telecommunication facilities on municipally-owned property. These locations are often preferred by municipalities as the second preference behind collocation as it allows municipalities to benefit from a rental stream for the leased premises.

(c) New Structure on Privately-owned Property

When it is not feasible to collocate on an existing tower or tall structure, and there are no feasible municipally-owned properties in the area, Verizon Wireless must find a privately-owned site which is appropriate for and can accommodate a new communications structure. In doing so, the Site Acquisition Specialist attempts to identify properties in the Search Area large enough to accommodate the facility and which also meet any required area requirements such as set back and fall zone. In addition, other characteristics such as existing compatible land use and existing mature vegetation that can screen the facility are considered. Access, land use, constructability, the presence of wetlands, floodplains and other contributing factors are also examined.

4. SEARCH RING ANALYSIS

After a comprehensive investigation of the Search Ring, no technologically feasible towers or tall structures were identified for collocation. There also are no feasible municipally owned properties within or near the limits of Search Ring.

Per the Code of the Town of Darien, wireless communication services facilities are permitted in Town of Darien with a Special Use Permit. Accordingly, Section 904 spells out the application process to include the following;

SECTION 904 APPLICATION PROCEDURES

A. Application – Applicants for zoning permits shall be accompanied by a layout sketch, drawn to scale, showing the shape and dimensions of the lot to be affected, the size and location of all buildings or structures to be constructed, altered or extended as well as unaffected structures that shall remain, the intended use of each building or structure, the exact location of all utility and other easements and rights-of-way, and any other information with regard to the lot affected and neighboring lots as may be necessary for compliance with requirements of this Zoning Law. The applicant is solely responsible for the accuracy of all information, data and site plans submitted pursuant to this Zoning Law. One (1) copy of the application, together with the layout sketch, shall be submitted. The Zoning Enforcement Officer

shall carefully consider the application, layout sketch and any supporting documents for compliance with this Zoning Law and either issued or deny the zoning permit in a timely manner.

5. CANDIDATE/ALTERNATIVES ANALYSIS

Four (4) parcels were identified as being potential candidates for a new communications facility. These parcels are identified on **Attachment 4**. A summary of each of these properties located within the vicinity of Search Area is detailed below, including, where warranted, RF analysis.

(b) Candidate B – contact Ken Feitshans – 716-901-6432
Address – 9657 Fargo Road, Corfu, NY 14036
Muni – Town of Darien, County – Genesee
Tax ID – 2-1-9.2

Candidate B is also located at the center of the search ring. The parcel consists of approximately 65 acres. The parcel is used primarily for agricultural use and the owner lives in a single family dwelling in the southeast portion of the property. Access to the site is from Fargo Road. Candidate and his family also own and/or control candidates A&C.

A new tower at the proposed height at the proposed Feitshans property location provides for coverage uniformly transmitted in all key directions including north along South Lake Road, Cohocton Road and I-90 and towards Pembroke, RF is also propagated to the east along West Main Street, Reynolds Road and Allegany Road / Route 77, and to the west along Genesee Street / Route 33 ,Fargo Road. This location is located at the center of the search ring at lower elevation compared to the other 3 candidates. Coverage will also be maximized across the local area including over 10 square miles of recreational roads, along local and community roads. A facility at this location would satisfy the objective to provide reliable wireless telecommunications service to the surrounding areas and accommodate the current AWS /2100 MHz coverage gaps in the town of Darien. The proposed coverage from this location is shown on **Attachment 5.**

(c) Candidate C – contact Ken Feitshans - 716-901-6432
Address – 9657 Fargo Road, Corfu, NY 14036
Muni – Town of Darien, County – Genesee
Tax ID – 2-1-10.1

Candidate C encompasses the easterly portion of the search ring. The parcel is approximately 60.7 acres of agricultural fields. Note – this site is part of the Feitshans farming operations, however Paul Feitshans died in 1968 but is still listed as the owner of record.

This location is inside the search ring to the east of the search ring however it does not cover the west of the target coverage area as well as the other 3 candidates, it has good elevation but does not cover the west of Darien along Genesee Street / Route 33 well. A facility at this location would meet the coverage objectives. This is seen in the propagation coverage map at **Attachment 6.**

(d) Candidate D – contact Wendy Schmitt – 585-599-7056
Address – 9669 Fargo Road , Corfu, NY 14036
Muni of Town of Darien, County – Genesee
Tax ID – 1-1-37.1

Candidate D is located adjacent to and directly south of the search ring area. It is a 19.77 acre parcel with a single family dwelling and agricultural fields. Access is from Fargo Road.

This location is outside the search ring to the south with the highest elevation of all candidates, even though this location is outside the search ring it meets all RF objectives .A facility at this location would meet the coverage objectives as it coverages the target area very well in all key directions including north along South Lake Road, Cohocton Road and I-90 and towards Pembroke, RF is also propagated to the east along West Main Street, Reynolds Road and Allegany Road / Route 77, and to the west along Genesee Street / Route 33 ,Fargo Road.. This is seen in the propagation coverage map at **Attachment 7**.

(a) Candidate A – contact Ken Feitshans – 716-901-6432
Address – 9657 Fargo Road, Corfu, NY 14036
Muni – Town of Darien, County – Genesee
Tax ID – 1-1-37.2

Candidate A located at the center of the search ring . The parcel consists of approximately 46.3 acres. The great majority of the parcel is agricultural fields mixed with some treed areas. Access to the parcel is from Fargo Road. Candidate A is the superior candidate based upon geographic layout, current access road, least intrusive construction area and location based upon coverage for the network.

This location provides the best coverage to the target areas at the proposed height in all key directions including north along South Lake Road, Cohocton Road and I-90 and towards Pembroke, RF is also propagated to the east along West Main Street, Reynolds Road and Allegany Road / Route 77, and to the west along Genesee Street / Route 33, Fargo Road. A proposed site at this location would have the highest elevation off all the candidates in the search ring. A facility at this location would satisfy the main RF objective to provide reliable wireless telecommunications service to the residents, farms and surrounding target areas and accommodate the current AWS coverage gaps . The proposed coverage from this location is shown on **Attachment 8**.

Height Justification

The antenna height (ACL) of 110 ft. at the Corfu location was chosen because at this height , the RF signal propagates extremely well to the target locations of residents and farms specifically north along South Lake Road, Cohocton Road and I-90 and towards Pembroke .The signal also propagates well to the east along West Main Street ,Reynolds Road and Allegany Road / Route 77. A facility at this location at proposed minimum height antenna center line of 110 ft. would also cover the south and west very well , along Genesee Street / Route 33 ,Fargo Road and satisfies the RF objective to offload the neighboring sites and address the AWS /2100 coverage gabs and provide reliable and adequate telecommunications services. The proposed antenna height of 110 ft. also takes into account any clearance needed to ensure that the RF signal or coverage pattern has line of sight and will not be obstructed by tree clutter and shadowing that can cause interference ,signal fading and poor handoffs .

This proposed antenna height of 110 ft. would also provide seamless service connectivity to existing Verizon Wireless sites of Pembroke HD, Darien Lake ,Darien ,Alden HD and South Newstead. The propagation model that was used to provide the plots for this planned site , demonstrates that there are very few deficiencies in the targeted areas to be served if the transmitting antennas are located at a height of 110 ft. This would provide the required reliable coverage that Verizon wireless customers are accustomed to. This proposed site would provide the needed coverage to adequately serve the residents, farms ,road ,routes and highways in the targeted areas, however this can only be accomplished if the antennas are located at the proposed height as the RF would propagate with minimum impediment or blocking .

The height justification attachments provided on **Attachments,8A,8B and 8C** show the differences in coverage at heights of 90 ft., 70 ft. and 50 ft. (Green) compared to the proposed height of 110 ft. (Purple). An antenna height lower than 110'ft, is not elevated enough to provide reliable coverage and capacity because of clutter blocking due to dense mature foliage. If the proposed Corfu site were to have an antenna centerline of 90ft, there would be coverage loss along the cell edge which is approximately a 3dbm to 6dbm difference in coverage at the cell edge . Furthermore, at an antenna height (ACL) of 70 ft. and 50 ft. or less , they would be more coverage gaps and holes in the target area and at the cell edge compared to coverage at an antenna height (ACL) of 110ft.

Furthermore, at an antenna height (ACL) of 70 ft., 50 ft. or less, they would be more coverage gaps and holes in the target area and at the cell edge compared to coverage at an antenna height (ACL) of 110ft, particularly along the north along South Lake Road, Cohocton Road and I-90 and towards Pembroke.

To conclude, as the antenna height decreases from 110 ft., there would be emanating clutter attenuation due foliage and this limits the full potential of RF coverage in the targeted area, and diminishes the user experience due to poor service. The proposed site with a selected antenna height of 110 ft. meets the RF objectives, and would provide the much needed coverage to serve the residents and businesses in the targeted area of Corfu and surrounding areas .The 110 ft. ACL will provide reliable telecommunication service without attenuation and allow for seamless connectivity and handoffs for a great customer experience in the town of Darien and surrounding areas.

5. CONCLUSION

Based on the requirements of the Zoning Law, the existing conditions and land use, Four (4) parcels or locations were identified for consideration. For these reasons, as well as the results of RF review and analysis, the Candidate A location is the best location for the proposed facility.

Prepared by:

Doug Morrison

Doug Morrison
Consultant to Verizon Wireless

Patrick Makubire

Patrick Makubire
Radio Frequency (RF) Design Engineer
Verizon Wireless

ATTACHMENT 1
VERIZON WIRELESS
"CORFU" SEARCH RING

ATTACHMENT 2
VERIZON WIRELESS COVERAGE
EXISTING SITES

AWS COVERAGE AWS -105 dBm RSRP - 105 dBm

Existing = Blue

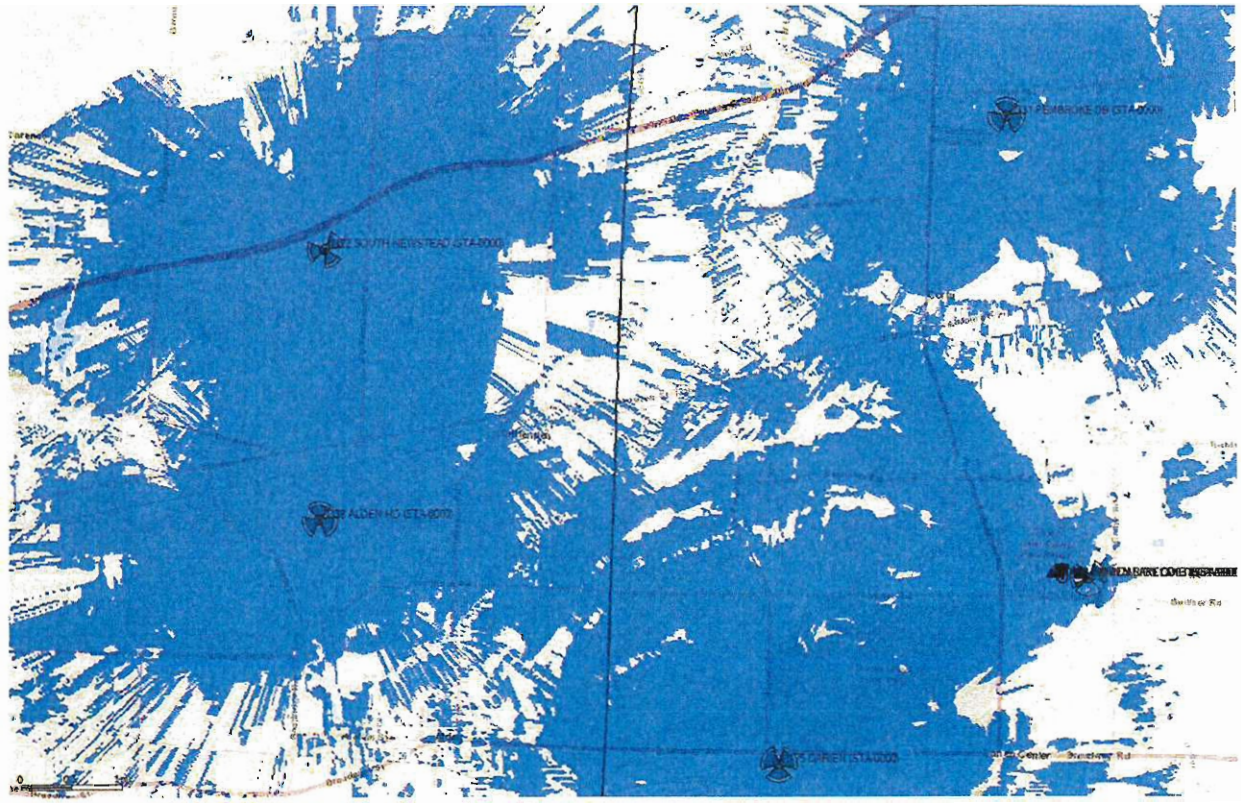

ATTACHMENT 3

VERIZON WIRELESS
OVERLAY – SEARCH RING, TAX MAP, AERIAL

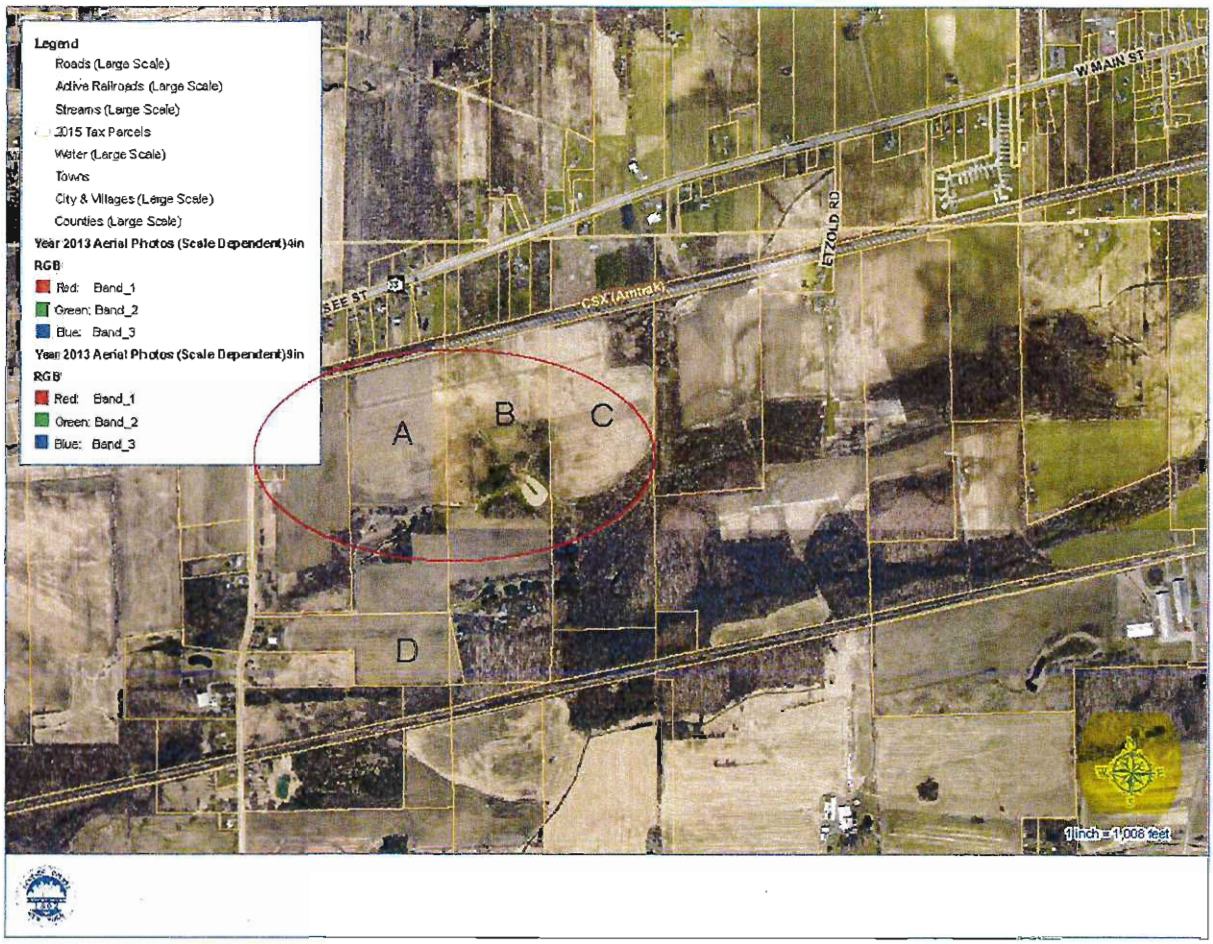

ATTACHMENT 4

VERIZON WIRELESS
PARCELS IDENTIFIED & INVESTIGATED

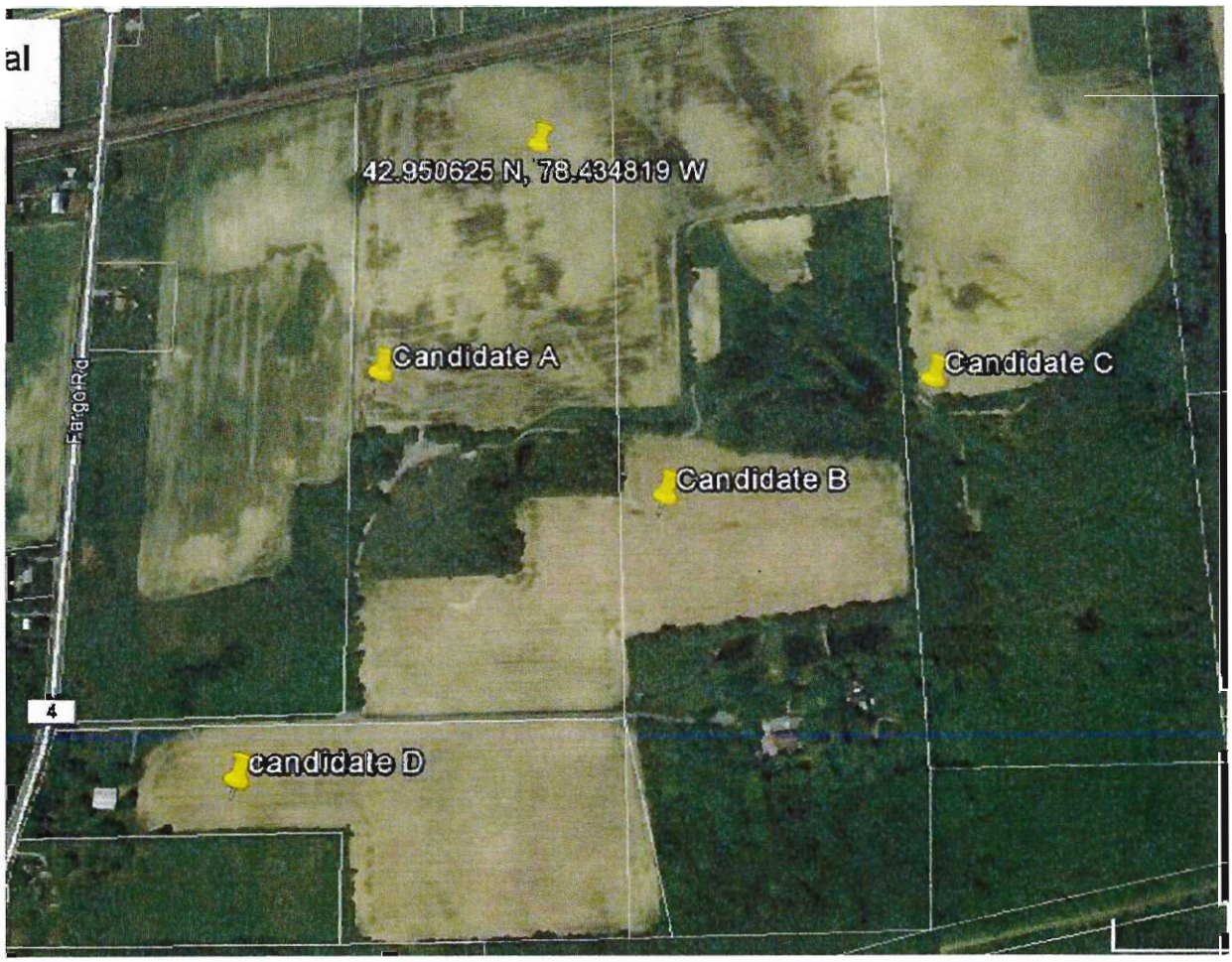

ATTACHMENT 5
VERIZON WIRELESS COVERAGE WITH
" KEN FEITSHANS PROPERTY – CANDIDATE B " SITE
110' ACL , AWS -105 dBm RSRP - 105 dBm

Existing = Blue , Proposed = Green

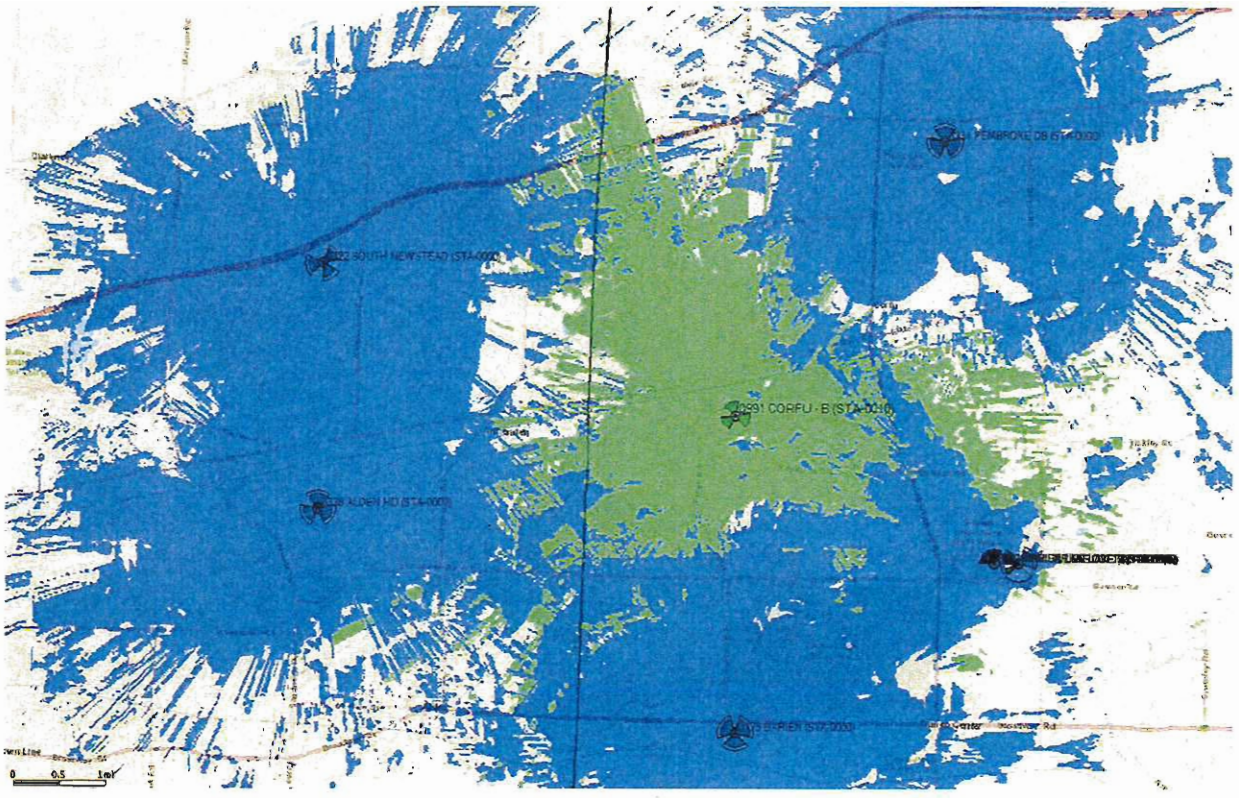

ATTACHMENT 6
VERIZON WIRELESS COVERAGE WITH "KEN FEITSHANS PROPERTY – CANDIDATE C " SITE 110' ACL , AWS -105 dBm RSRP - 105 dBm

Existing = Blue, Proposed = Green

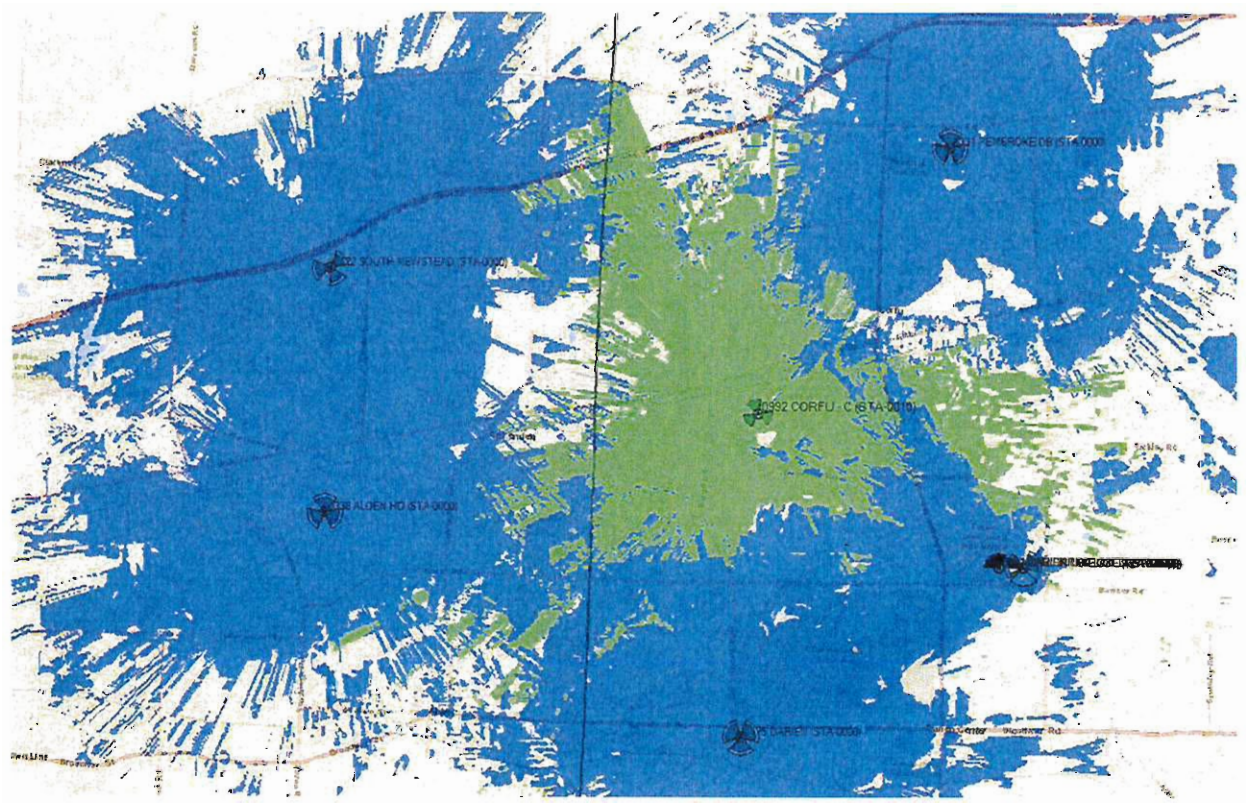

ATTACHMENT 7
VERIZON WIRELESS COVERAGE WITH "WENDY SCHMITT PROPERTY – CANDIDATE D " SITE
110' ACL , AWS -105 dBm RSRP - 105 dBm

Existing = Blue, Proposed = Green

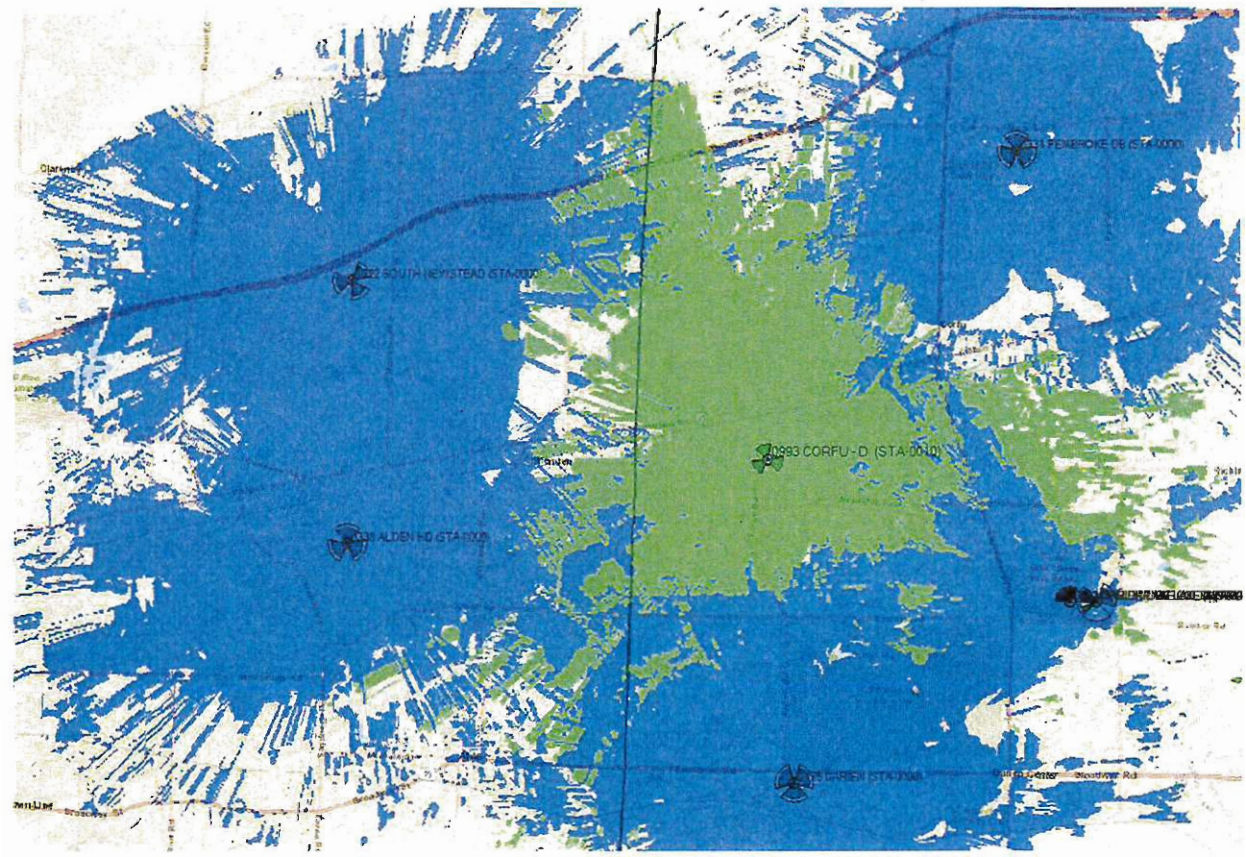

ATTACHMENT 8
VERIZON WIRELESS COVERAGE WITH "KEN FEITSHANS PROPERTY – CANDIDATE A " SITE 110' ACL , AWS -105 dBm RSRP - 105 dBm

Existing = Blue, Proposed = Green

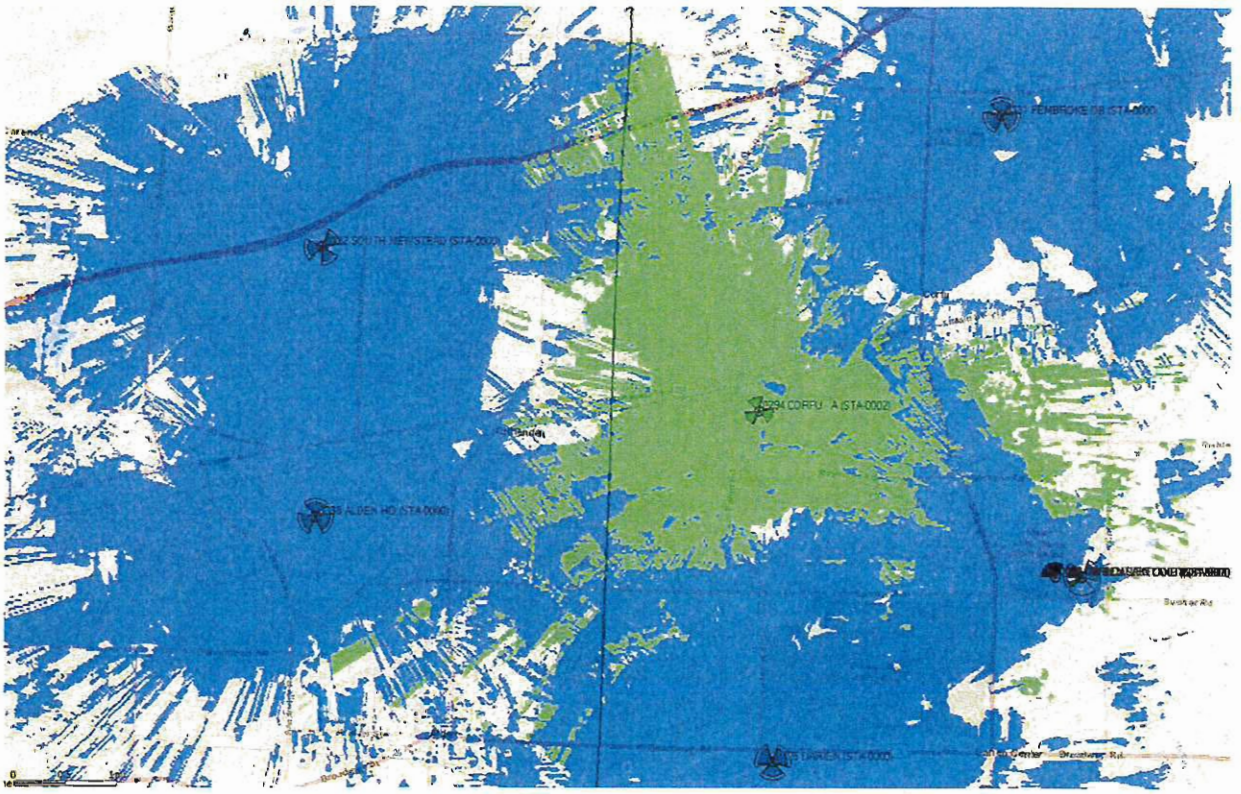

ATTACHMENT 8A
VERIZON WIRELESS COVERAGE WITH "CORFU" SITE
AWS Service: -105 dBm RSRP:

Green = Corfu – Proposed at 90' ACL, Purple = Proposed at 110' ACL

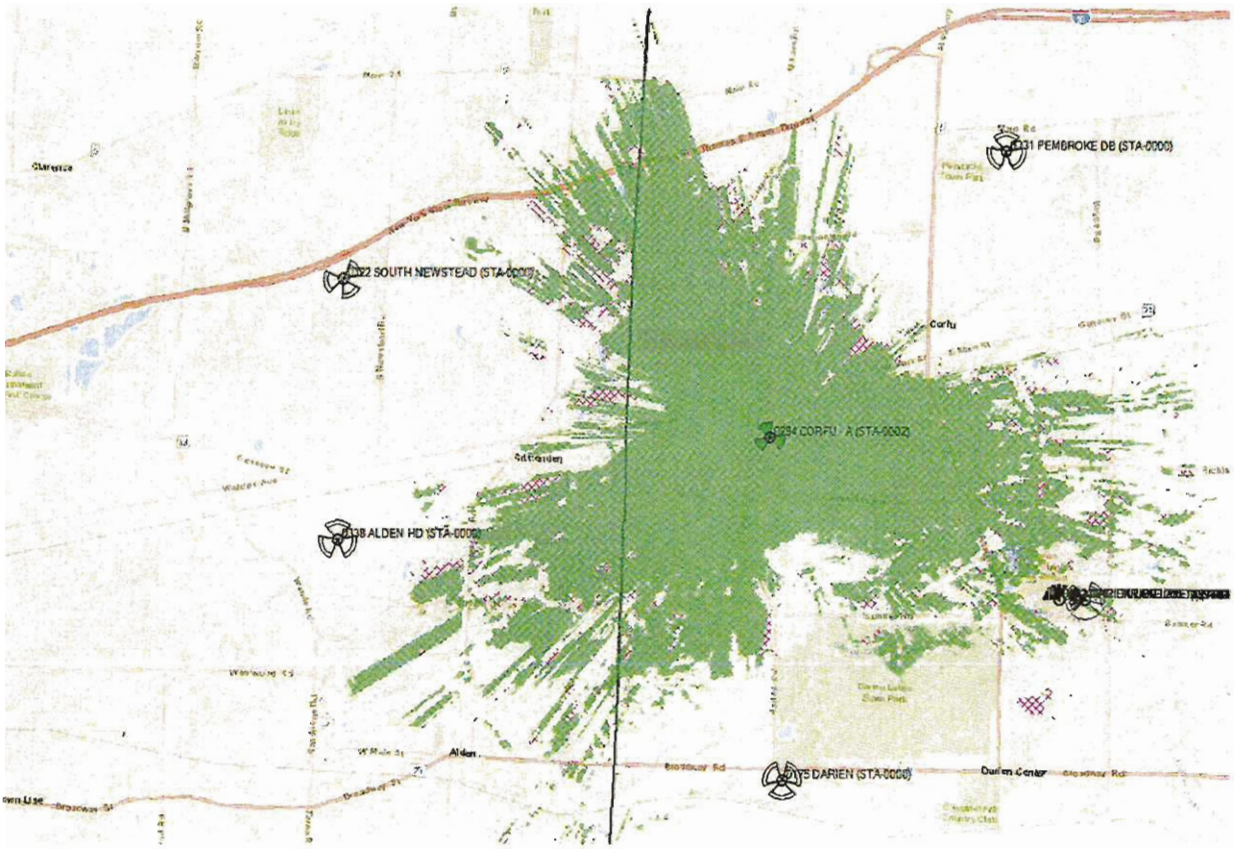

ATTACHMENT 8B
VERIZON WIRELESS COVERAGE WITH "CORFU" SITE
AWS Service: -105 dBm RSRP:

Green = Indian Falls – Proposed at 70' ACL, Purple = Proposed at 110' ACL

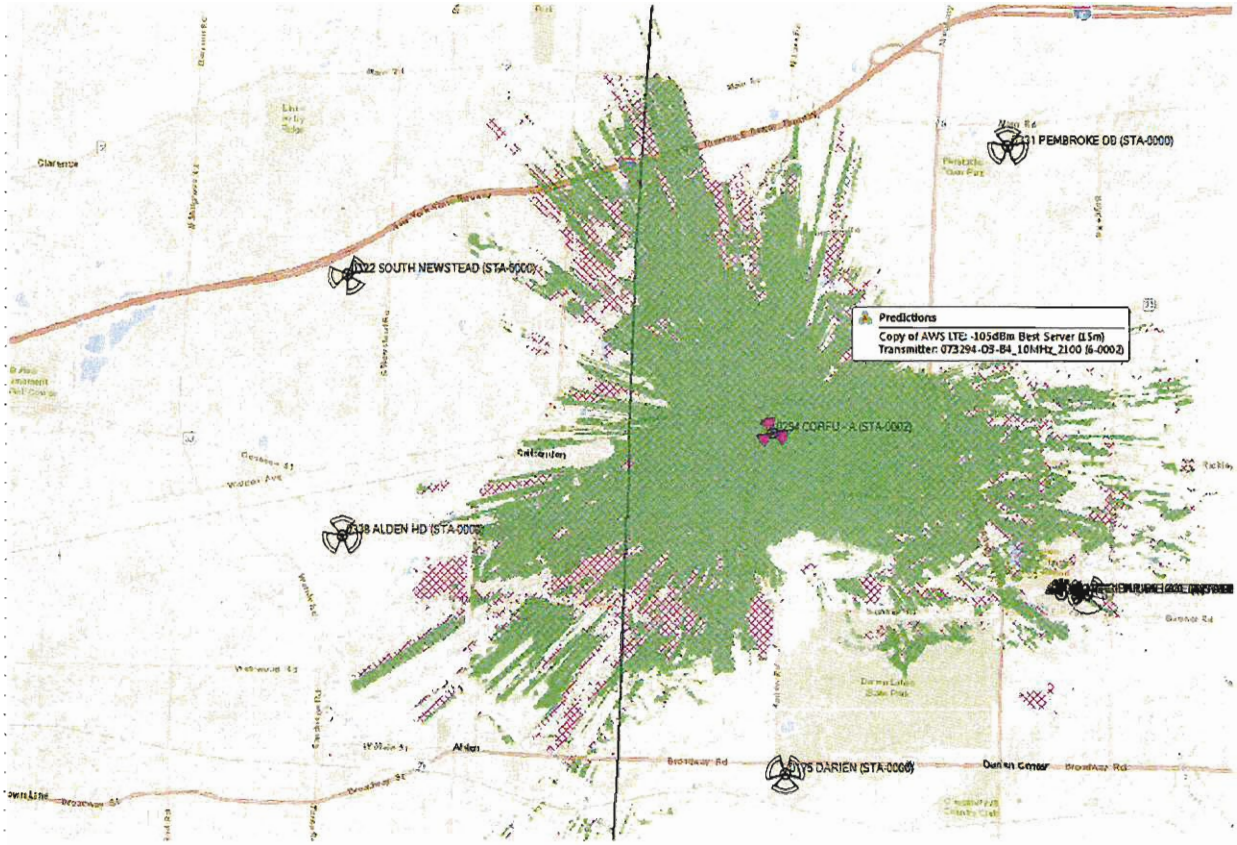

ATTACHMENT 8C
VERIZON WIRELESS COVERAGE WITH "CORFU" SITE
AWS Service: -105 dBm RSRP:

Green = Indian Falls – Proposed at 50' ACL, Purple = Proposed at 110' ACL

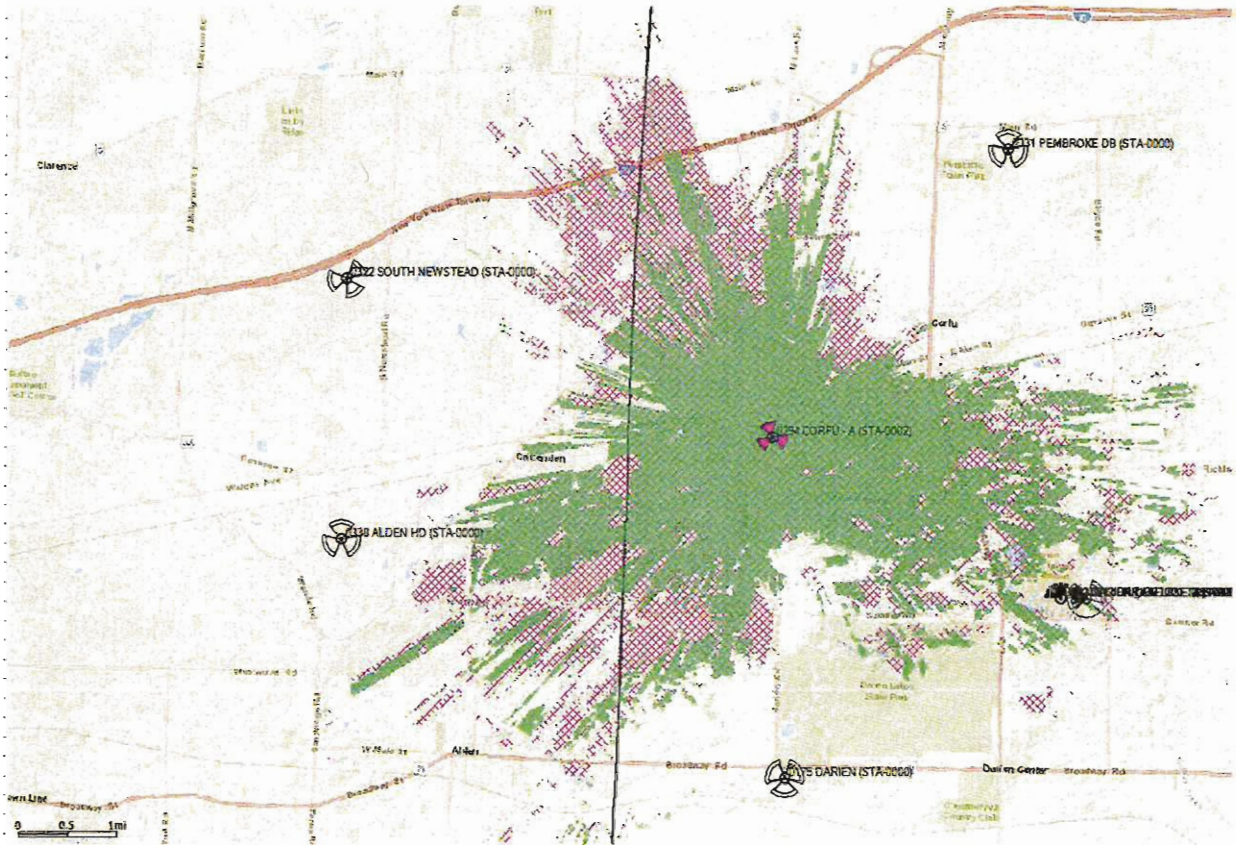

EXHIBIT D

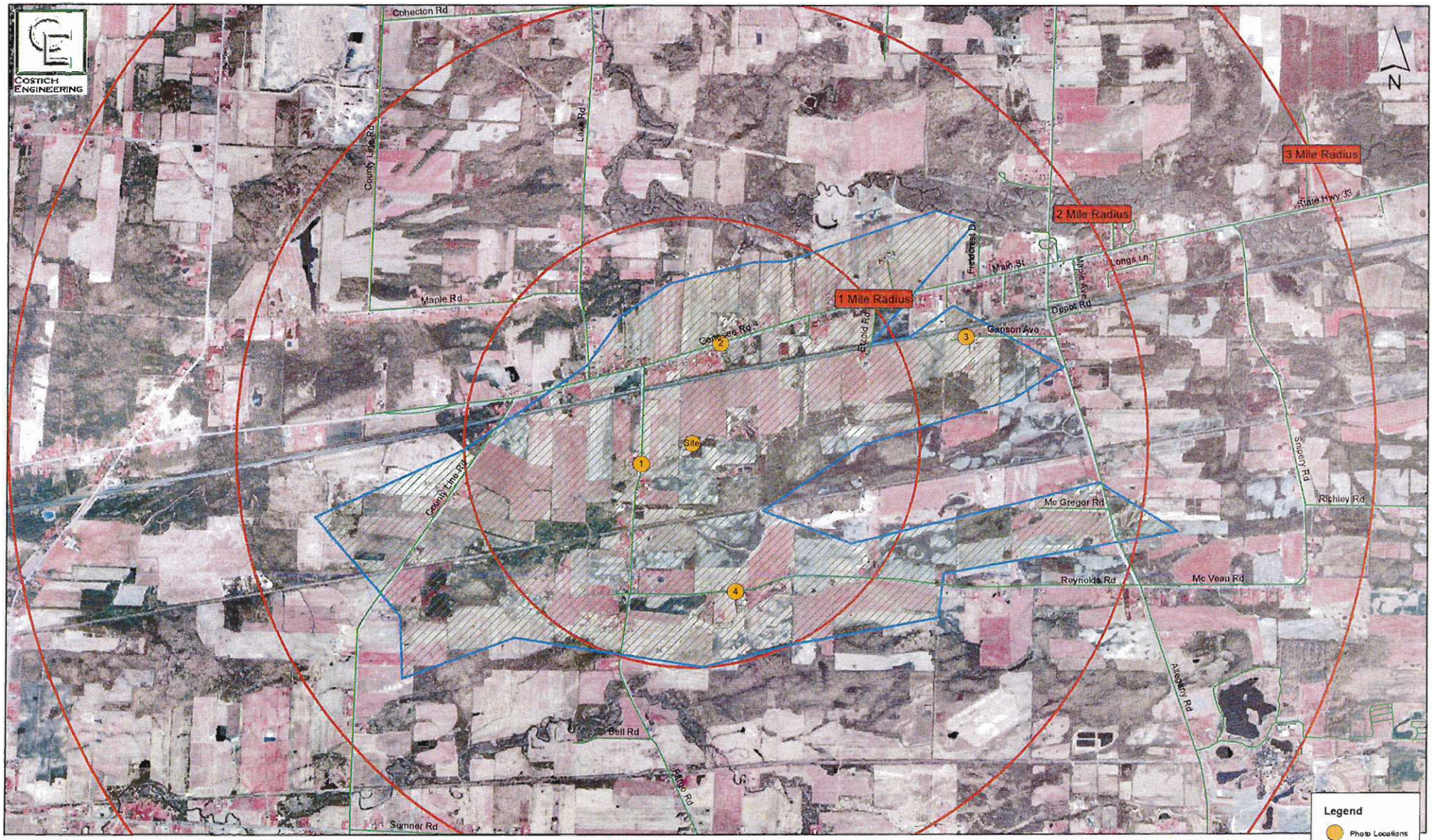

CE# 6594
10/18/2017

0 1,000 2,000 Feet

Viewshed Map / Photolog
Corfu
ATC# 201958

Costich Engineering Land Surveying Landscape Architecture 217 LAKE AVENUE ROCHESTER, NY 14608 (585) 458-3020	PROJECT NAME Corfu	PHOTO DESCRIPTION View towards proposed site Balloons at 175' and 195'	DATE OF PHOTO 10/18/2017
	Photo 1		C.E. JOB# 6594
	PHOTO COORDINATES 42° 56' 46.3488" N, 78° 26' 24.8388" W	PHOTO LOCATION View West from Fargo Rd 1266' from site	ATC# 201958

Costich Engineering Land Surveying Landscape Architecture 217 LAKE AVENUE ROCHESTER, NY 14608 (585) 458-3020	PROJECT NAME Corfu Photo 1 PHOTO COORDINATES 42° 56' 46.3488" N, 78° 26' 24.8388" W	PHOTO DESCRIPTION Photosimulation of proposed 115' monopole PHOTO LOCATION View West from Fargo Rd 1266' from site	DATE OF PHOTO 10/18/2017 C.E. JOB# 6594 ATC# 201958

Costich Engineering
Land Surveying
Landscape Architecture
217 LAKE AVENUE
ROCHESTER, NY 14608
(585) 458-3020
COSTICH ENGINEERING

PROJECT NAME
Corfu

Photo 2

PHOTO COORDINATES
42° 57' 14.2884" N, 78° 26' 01.4676" W

PHOTO DESCRIPTION
View towards proposed site
Balloons at 175' and 195'

PHOTO LOCATION
View South from Genessee Rd.
2435' from site

DATE OF PHOTO
10/18/2017

C.E. JOB#
6594

ATC#
201958

Costich Engineering Land Surveying Landscape Architecture 217 LAKE AVENUE ROCHESTER, NY 14608 (585) 458-3020	PROJECT NAME Corfu	PHOTO DESCRIPTION Photosimulation of proposed 115' monopole	DATE OF PHOTO 10/18/2017
	Photo 2		C.E. JOB# 6594
	PHOTO COORDINATES 42° 57' 14.2884" N, 78° 26' 01.4676" W	PHOTO LOCATION View South from Genessee Rd. 2435' from site	ATC# 201958

Costich Engineering Land Surveying Landscape Architecture 217 LAKE AVENUE ROCHESTER, NY 14608 (585) 458-3020	PROJECT NAME Corfu Photo 3 PHOTO COORDINATES 42° 57' 18.3816" N, 78° 24' 45.3240" W	PHOTO DESCRIPTION View towards proposed site Balloons at 175' and 195' PHOTO LOCATION View SE from Ganson Rd. 1.28 miles from site	DATE OF PHOTO 10/18/2017 C.E. JOB# 6594 ATC# 201958

Costich Engineering Land Surveying Landscape Architecture 217 LAKE AVENUE ROCHESTER, NY 14608 (585) 458-3020	PROJECT NAME Corfu	PHOTO DESCRIPTION Photosimulation of proposed 115' monopole	DATE OF PHOTO 10/18/2017
	Photo 3		C.E. JOB# 6594
	PHOTO COORDINATES 42° 57' 18.3816" N, 78° 24' 45.3240" W	PHOTO LOCATION View SE from Ganson Rd. 1.28 miles from site	ATC# 201958

Costich Engineering Land Surveying Landscape Architecture 217 LAKE AVENUE ROCHESTER, NY 14608 (585) 458-3020	PROJECT NAME Corfu	PHOTO DESCRIPTION View towards proposed site Balloons at 175' and 195'	DATE OF PHOTO 10/18/2017
	Photo 4		C.E. JOB# 6594
	PHOTO COORDINATES 42° 56' 17.4372" N, 78° 25' 53.1156" W	PHOTO LOCATION View North from Reynolds Rd. 3631' from site	ATC# 201958

Costich Engineering Land Surveying Landscape Architecture 217 LAKE AVENUE ROCHESTER, NY 14608 (585) 458-3020	PROJECT NAME Corfu	PHOTO DESCRIPTION Photosimulation of proposed 115' monopole	DATE OF PHOTO 10/18/2017
	Photo 4		C.E. JOB# 6594
	PHOTO COORDINATES 42° 56' 17.4372" N, 78° 25' 53.1156" W	PHOTO LOCATION View North from Reynolds Rd. 3631' from site	ATC# 201958

EXHIBIT E

MILLENNIUM ENGINEERING, P.C.
132 Jaffrey Road
Malvern, Pennsylvania 19355
Cell: 610-220-3820 Fax: 610-644-4355
www.millenniumengineering.net Email: pauldugan@comcast.net

July 17, 2017

Attn: Patrick Makubire, RF Design Engineer I
Verizon Wireless
1275 John Street, Suite #100
West Henrietta, NY 14586

Re: RF Safety FCC Compliance of Proposed Communications Facility
Site Name: Corfu, Proposed 115' Monopole
9657 Fargo Road, Darien, NY 14036 (Town of Darien, Genesee County)

Dear Mr. Makubire,

I have performed an analysis to provide an independent determination and certification that the proposed Verizon Wireless communications facility at the above referenced property will comply with Federal Communications Commission (FCC) exposure limits and guidelines for human exposure to radiofrequency electromagnetic fields (Code of Federal Regulation 47 CFR 1.1307 and 1.1310). As a registered professional engineer I am under the jurisdiction of the State Registration Boards in which I am licensed to hold paramount the safety, health, and welfare of the public and to issue all public statements in an objective and truthful manner.

The proposed communications facility consists of a proposed 115' monopole owned by American Tower Corp. (Site Name/ID: Corfu / 201958) at the above referenced property. The proposed Verizon Wireless antenna configuration from the information furnished to me consists of (1) 700/850/1900 MHz (LTE) multiband antenna (CommScope NHH-65C-R2B or equivalent) and (1) 700/850/2100 MHz (LTE) multiband antenna (CommScope NHH-65C-R2B or equivalent) on each of three faces (total of 6 antennas) spaced with azimuths of 5/220/305 degrees on the horizontal plane at a centerline of 110' above ground level and mechanical downtilt of 1 degree on each face. Transmitting from these antennas will be up to (2) 700 MHz LTE wideband channels, up to (2) 850 MHz LTE wideband channels, up to (2) 1900 MHz LTE wideband channels and up to (2) 2100 MHz LTE wideband channels per face.

The following assumptions are made for reasonable upper limit radiofrequency operating parameters for the proposed facility due to Verizon Wireless antennas alone to accommodate all licensed frequency bands:

- (1) 700/850/1900 MHz (LTE) multiband transmit antenna per face at 0-10 degrees mechanical downtilt
- (1) 700/850/2100 MHz (LTE) multiband transmit antenna per face at 0-10 degrees mechanical downtilt
- (2) 700 MHz LTE wideband channels/face at 4x30W max power/face before cable loss/antenna gain
- (2) 850 MHz LTE wideband channels/face at 4x30W max power/face before cable loss/antenna gain
- (2) 1900 MHz LTE wideband channels/face at 4x30W max power/face before cable loss/antenna gain
- (2) 2100 MHz LTE wideband channels/face at 4x45W max power/face before cable loss/antenna gain
- The facility would be at or near full capacity during busy hour

Using the far-field power density equations from FCC Bulletin OET 65, the power density at any given distance from the antennas is equal to $0.360(ERP)/R^2$ where R is the distance to the point at which the exposure is being calculated. The given equation is a conversion of the OET 65 power density equation for calculating power density given the distance in feet and the result in metric units (mW/cm^2). This calculated power density assumes the location is in the main beam of the vertical pattern of the antenna. After making an adjustment for the reduction in power density due to the vertical pattern of the transmit antenna, the calculated ground level power density is well below 1 $\mu W/cm^2$ at any distance from the antenna system of Verizon Wireless.

The 700 MHz "Upper C Block" transmit frequencies (746-757 MHz), which Verizon Wireless is licensed by the FCC to operate, have an uncontrolled/general population maximum permissible exposure (MPE) FCC limit of 497 $\mu W/cm^2$. The 850 MHz (cellular) "B Band" transmit frequencies (880-894 MHz), which Verizon Wireless is also licensed by the FCC to operate, have an uncontrolled/general population MPE FCC limit of 587 $\mu W/cm^2$. The 1900 MHz (PCS) "F Block" transmit frequencies (1970-1975 MHz), which Verizon Wireless is also licensed by the FCC to operate, have an uncontrolled/general population MPE FCC limit of 1000 $\mu W/cm^2$ or 1 mW/cm^2. The 2100 MHz (AWS) "B Block", "F Block" and "J Block" transmit frequencies (2120-2130, 2145-2155, 2170-2180 MHz), which Verizon Wireless is also licensed by the FCC to operate, have an uncontrolled/general population MPE FCC limit of 1000 $\mu W/cm^2$ or 1 mW/cm^2. Therefore, the exposure at ground level at any distance from the structure would be substantially below 1 % of the FCC general population exposure limits due to Verizon Wireless antennas alone. The extremely low ground exposure levels are due to the elevated positions of the antennas in the structure and the low power which these systems operate. See Figures 1 and 2 in back of this report which discuss the relationship between height, proximity or distance, and orientation to level of electromagnetic field exposure.

From the standpoint of RF exposure, the presence of Verizon Wireless would not preclude the future addition of other tenants or licensees including emergency or other municipal services which benefit the public from collocation on this structure. There is a substantial margin of safety to allow for the addition of transmit antennas of other communications services. Keep in mind that continuous exposure at 100 % of standard is considered by the scientific community as just as safe as 1 % of standard since the exposure limits themselves contain a large margin of safety.

In summary, the proposed communications facility will comply with all applicable exposure limits and guidelines adopted by the FCC governing human exposure to radiofrequency electromagnetic fields (FCC Bulletin OET 65). Federal law (FCC Rule Title 47 CFR 1.1307 and 1.1310) sets the national standard for compliance with electromagnetic field safety. The FCC exposure limits are based on exposure limits recommended by the National Council on Radiation Protection and Measurements (NCRP) and, over a wide range of frequencies, the exposure limits developed by the Institute of Electrical and Electronics Engineers, Inc., (IEEE) and adopted by the American National Standards Institute (ANSI). **Thus, there is full compliance with the standards of the IRPA, FCC, IEEE, ANSI, and NCRP.**

General Information on Electromagnetic Field Safety

Verizon Wireless facilities transmit and receive low power electromagnetic fields (EMF) between base station antennas and handheld portable cell phones. The radiofrequency energy from these facilities and devices is non-ionizing electromagnetic energy. Non-ionizing, unlike X-Rays or other forms of potentially harmful energy in the microwave region, is not cumulative over time nor can the energy change the chemical makeup of atoms (e.g. strip electrons from ions). "Non-ionizing" simply means that the energy is not strong enough to break ionic bonds.

Safe levels of electromagnetic fields were determined by numerous worldwide organizations, such the International Committee for Non-Ionizing Radiation Protection, a worldwide multi-disciplinary team of researchers and scientists studying the effects of non-ionizing radiofrequency energy such as that emitted by base

stations or cell phones. The FCC did not arbitrarily establish their own standards, but adopted the recommendations of all leading organizations that set standards and research the subject such as the Institute of Electrical and Electronics Engineers (IEEE), American National Standards Institute (ANSI), and National Council on Radiation Protection and Measurements (NCRP).

When Verizon Wireless is located on an antenna structure such as a self-supporting lattice type tower, monopole, guyed tower, watertank, etc. the antennas are typically 10 meters or more above ground level (10 meters = 32.81 feet). With the relatively low power and elevated positions of the antennas on the structure with respect to ground level, the maximum ground level exposure can rarely approach 1 % of the applicable FCC exposure limit regardless of how many sets of antennas are collocated on the structure. For this reason, the FCC considers the facilities "categorically excluded" from routine evaluation at antenna heights above 10 meters (or above 32.81 feet). Categorical exclusion exempts a site from routine on-site evaluation. However, the facility is not excluded from compliance with the federal exposure limits and guidelines. The types of facilities used by Verizon Wireless typically elevated on antenna structures (away from access to close proximity, i.e. greater than 10 meters or 32.81 feet) simply cannot generate ground level exposure levels that approach the limits under any circumstances.

From a regulatory perspective, the FCC has sole jurisdiction over the regulation of electromagnetic fields from all facilities and devices. The FCC has established guidelines and limits over emissions and exposure to protect the general public. The FCC also has certain criteria that trigger when an environmental evaluation must be performed. The criteria are based on distance from the antennas (accessibility) and transmit power levels.

CONCLUSIONS:

1) **The proposed communications facility will comply with electromagnetic field safety standards by a substantial margin (well below 1 %) in all publicly accessible areas. This includes the base of the proposed structure and any areas in proximity to the proposed structure.**

2) **Verizon Wireless takes appropriate measures to ensure that all telecommunications facilities (including this proposed facility) comply with applicable exposure limits and guidelines adopted by the FCC governing human exposure to radiofrequency electromagnetic fields (FCC Bulletin OET 65).**

3) **In cases where such compliance exists, the subject of electromagnetic field safety is preempted**. The Telecommunications Act of 1996 states that: "No state or local government or instrumentality thereof may regulate the placement, construction, and modification of personal wireless service facilities on the basis of the environmental effects of radio frequency emissions to the extent that such facilities comply with the [FCC's] regulations concerning such emissions." Telecommunications Act of 1996, § 332[c][7][B][iv].

Respectfully,

Paul Dugan, P.E.
Registered Professional Engineer
New York License Number 79144

FIGURE 1: Diagram of Electromagnetic Field Strength as a Function of Distance and Antenna Orientation

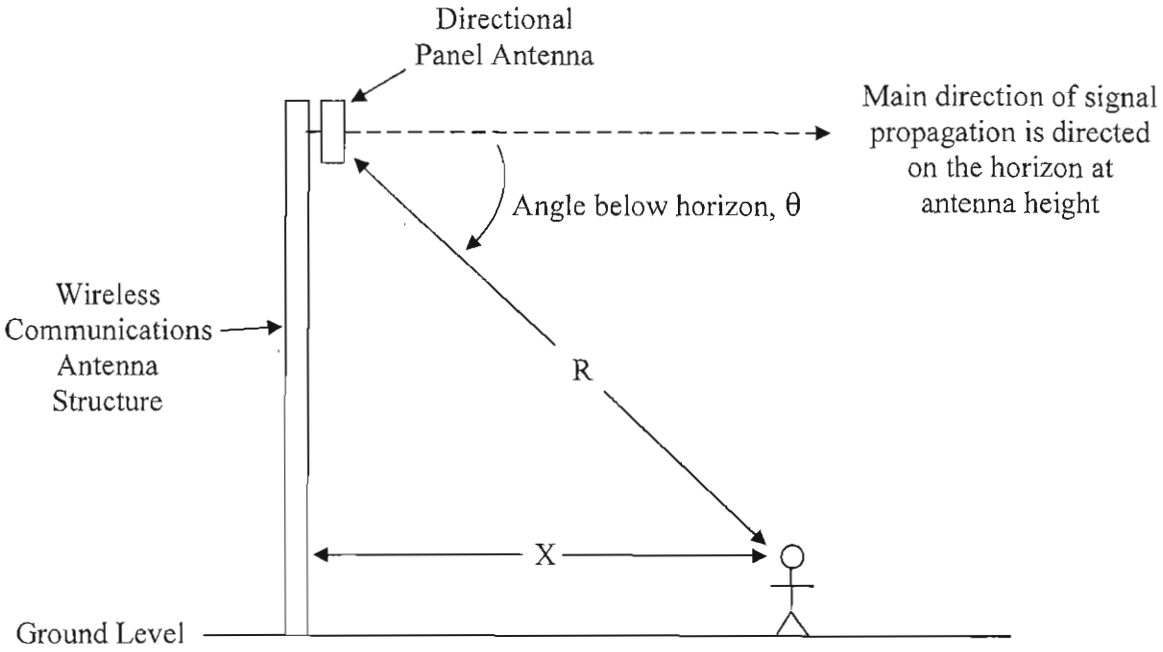

The above diagram illustrates the conceptual relationship of distance and orientation to directional panel antennas used in wireless communications. At the base of the structure (x = 0), the distance R is a minimum when the angle of the direction of propagation θ is a maximum. As one moves away from the antenna structure, the horizontal distance X increases as well as the distance R to the antennas while the angle below the horizon decreases. For this reason, electromagnetic fields from these facilities remain fairly uniform up to a few hundred feet and continue to taper off with distance. As noted in the report, the electromagnetic fields from these types of facilities are hundreds of times below safety standards at any distance from the antenna structure, making them essentially indistinguishable relative to other sources of electromagnetic fields in the environment due to the elevated heights of the antennas and the relatively low power at which these systems operate.

FIGURE 2: Graph of MPE Contribution vs. Distance

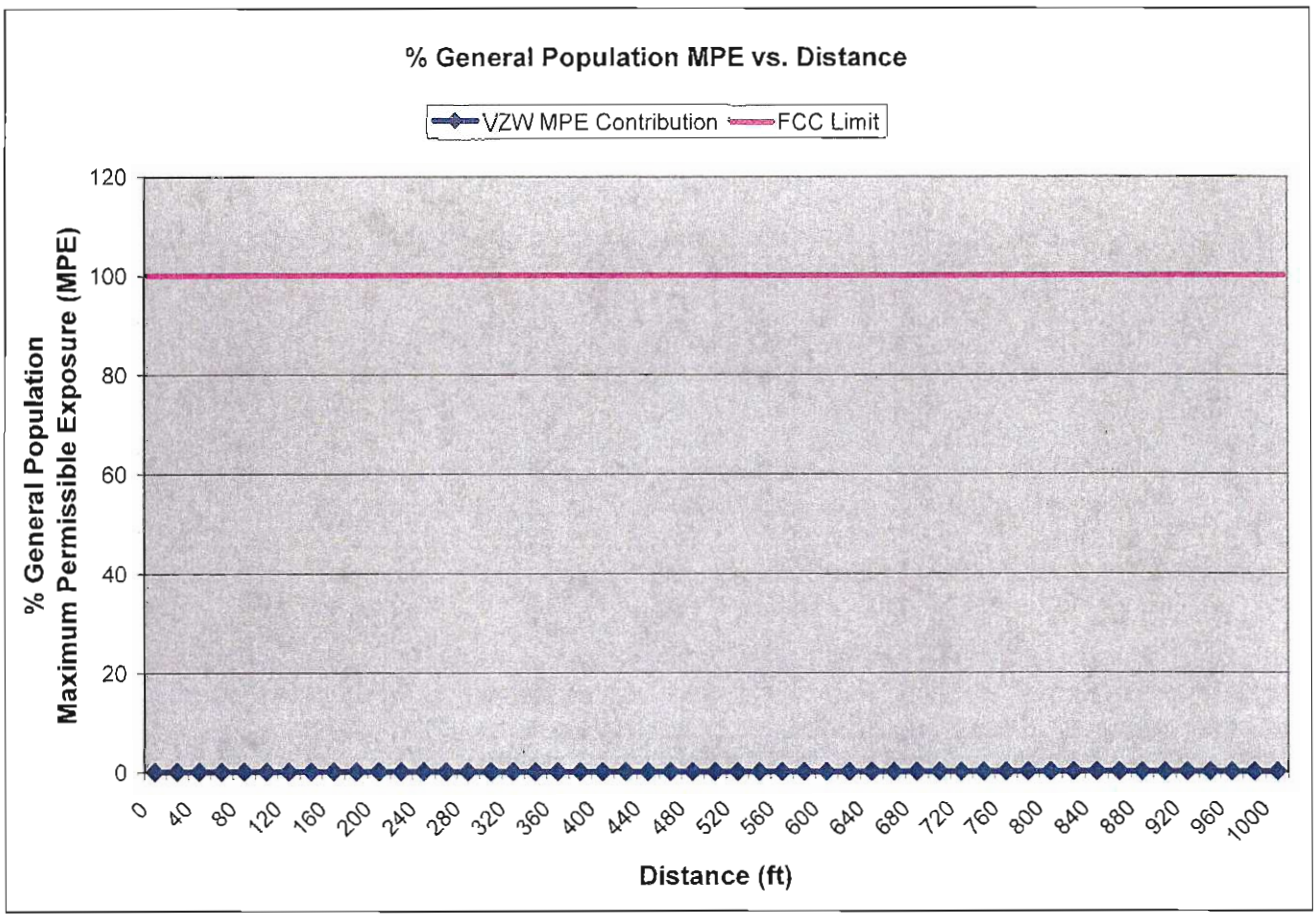

The above graph represents the contribution of Verizon Wireless to the composite electromagnetic field exposure level at any distance from the base of the structure. The contribution of Verizon Wireless will remain well under 1% of the FCC general population maximum permissible exposure (MPE) at any distance as shown.

DECLARATION OF ENGINEER

Paul Dugan, P.E., declares and states that he is a graduate telecommunications consulting engineer (BSE/ME Widener University 1984/1988), whose qualifications are a matter of record with the Federal Communications Commission (FCC). His firm, Millennium Engineering, P.C., has been retained by Verizon Wireless to perform power density measurements or calculations for an existing or proposed communications facility and analyze the data for compliance with FCC exposure limits and guidelines for human exposure to radiofrequency electromagnetic fields.

Mr. Dugan also states that the calculations or measurements made in the evaluation were made by himself or his technical associates under his direct supervision, and the summary letter certification of FCC compliance associated with the foregoing document was made or prepared by him personally. Mr. Dugan is a registered professional engineer in the Jurisdictions of Pennsylvania, New Jersey, Delaware, Maryland, Virginia, New York, Connecticut, District of Columbia, West Virginia and Puerto Rico with over 30 years of engineering experience. Mr. Dugan is also an active member of the Association of Federal Communications Consulting Engineers, the National Council of Examiners for Engineering, the National Society of Professionals Engineers, the Pennsylvania Society of Professional Engineers, and the Radio Club of America. Mr. Dugan further states that all facts and statements contained herein are true and accurate to the best of his own knowledge, except where stated to be in information or belief, and, as to those facts, he believes them to be true. He believes under penalty of perjury the foregoing is true and correct.

Paul Dugan, P.E.

Executed this the 17th day of July, 2017.

PAUL DUGAN, P.E.
132 Jaffrey Road
Malvern, Pennsylvania 19355

Cell: 610-220-3820
Fax: 610-644-4355
Email: pauldugan@comcast.net
Web Page: www.millenniumengineering.net

EDUCATION:

Widener University, Chester, Pennsylvania
Master of Business Administration, July 1991
Master of Science, Electrical Engineering, December 1988
Bachelor of Science, Electrical Engineering, May 1984

PROFESSIONAL ASSOCIATIONS:

Registered Professional Engineer in the following jurisdictions:

Pennsylvania, License Number PE-045711-E
New Jersey, License Number GE41731
Maryland, License Number 24211
Delaware, License Number 11797
Virginia, License Number 36239
Connecticut, License Number 22566
New York, License Number 079144
District of Columbia, License Number PE-900355
West Virginia, License Number 20258
Puerto Rico, License Number 18946

Full member of **The Association of Federal Communications Consulting Engineers** (www.afcce.org) January 1999 to Present
Elected to serve on the Board of Directors for 2006-2007

Full member of **The National Society of Professional Engineers** (www.nspe.org) and the **Pennsylvania Society of Professional Engineers** (www.pspe.org) June 2003 to Present
Currently serving on the Board of Directors of the Valley Forge Chapter and as South East Region Vice-Chair for the "Professional Engineers in Private Practice" Executive Committee

Actively participate in **Chester County ARES/RACES** (CCAR www.w3eoc.org) which prepares and provides emergency backup communications for Chester County Department of Emergency Services, March 2005 to Present

Full member of **The National Council of Examiners for Engineering** (www.ncees.org) May 2001 to Present

Full Member of **The Radio Club of America** (www.radio-club-of-america.org) December 2003 to present

PROFESSIONAL EXPERIENCE:

Millennium Engineering, P.C., Malvern, Pennsylvania
Position: **President**, August 1999 to Present (www.millenniumengineering.net)

Verizon Wireless, Plymouth Meeting, Pennsylvania
Position: **Cellular RF System Design/Performance Engineer**, April 1990 to August 1999

Communications Test Design, Inc., West Chester, Pennsylvania
Position: **Electrical Engineer,** May 1984 to April 1990

EXHIBIT F

Full Environmental Assessment Form
Part 1 - Project and Setting

Instructions for Completing Part 1

Part 1 is to be completed by the applicant or project sponsor. Responses become part of the application for approval or funding, are subject to public review, and may be subject to further verification.

Complete Part 1 based on information currently available. If additional research or investigation would be needed to fully respond to any item, please answer as thoroughly as possible based on current information; indicate whether missing information does not exist, or is not reasonably available to the sponsor; and, when possible, generally describe work or studies which would be necessary to update or fully develop that information.

Applicants/sponsors must complete all items in Sections A & B. In Sections C, D & E, most items contain an initial question that must be answered either "Yes" or "No". If the answer to the initial question is "Yes", complete the sub-questions that follow. If the answer to the initial question is "No", proceed to the next question. Section F allows the project sponsor to identify and attach any additional information. Section G requires the name and signature of the project sponsor to verify that the information contained in Part 1 is accurate and complete.

A. Project and Sponsor Information.

Name of Action or Project: ATC Site #201958 Corfu, New York		
Project Location (describe, and attach a general location map): 9657 Fargo Road, Corfu, New York 14036		
Brief Description of Proposed Action (include purpose or need): American Towers LLC is proposing to construct a wireless telecommunications facility consisting of an approximately 115' monopole and a 75'x75' fenced equipment compound within a 100'x100' lease area in the eastern portion of the approximately 111-acre property. The facility will be accessed from Fargo Road along an approximately 1900' access drive. The facility is proposed to provide critical reliable wireless services.		
Name of Applicant/Sponsor: American Towers LLC	Telephone: 866-586-9377 E-Mail: enviro.services@americantower.com	
Address: 10 Presidential Way		
City/PO: Woburn	State: Massachusetts	Zip Code: 01801
Project Contact (if not same as sponsor; give name and title/role): Mike Eacho, American Tower Project Manager	Telephone: 603-234-2782 E-Mail: michael.eacho@americantower.com	
Address: 10 Presidential Way		
City/PO: Woburn	State: MA	Zip Code: 01801
Property Owner (if not same as sponsor): Kenneth L. Feitshans	Telephone: E-Mail:	
Address: 9657 Fargo Road		
City/PO: Corfu	State: New York	Zip Code: 14036

B. Government Approvals

B. Government Approvals, Funding, or Sponsorship. ("Funding" includes grants, loans, tax relief, and any other forms of financial assistance.)		
Government Entity	**If Yes: Identify Agency and Approval(s) Required**	**Application Date (Actual or projected)**
a. City Council, Town Board, or Village Board of Trustees ☐Yes☑No		
b. City, Town or Village Planning Board or Commission ☑Yes☐No	Special Permit for Communication Tower	
c. City Council, Town or Village Zoning Board of Appeals ☐Yes☑No		
d. Other local agencies ☐Yes☑No		
e. County agencies ☑Yes☐No	239-m referral	
f. Regional agencies ☐Yes☑No		
g. State agencies ☐Yes☑No		
h. Federal agencies ☐Yes☑No		

i. Coastal Resources.
i. Is the project site within a Coastal Area, or the waterfront area of a Designated Inland Waterway? ☐Yes☑No

ii. Is the project site located in a community with an approved Local Waterfront Revitalization Program? ☐Yes☑No
iii. Is the project site within a Coastal Erosion Hazard Area? ☐Yes☑No

C. Planning and Zoning

C.1. Planning and zoning actions.

Will administrative or legislative adoption, or amendment of a plan, local law, ordinance, rule or regulation be the only approval(s) which must be granted to enable the proposed action to proceed? ☐Yes☑No

- **If Yes,** complete sections C, F and G.
- **If No,** proceed to question C.2 and complete all remaining sections and questions in Part 1

C.2. Adopted land use plans.

a. Do any municipally- adopted (city, town, village or county) comprehensive land use plan(s) include the site where the proposed action would be located? ☐Yes☑No
If Yes, does the comprehensive plan include specific recommendations for the site where the proposed action would be located? ☐Yes☐No

b. Is the site of the proposed action within any local or regional special planning district (for example: Greenway Brownfield Opportunity Area (BOA); designated State or Federal heritage area; watershed management plan; or other?) ☐Yes☑No
If Yes, identify the plan(s):

c. Is the proposed action located wholly or partially within an area listed in an adopted municipal open space plan, or an adopted municipal farmland protection plan? ☐Yes☑No
If Yes, identify the plan(s):

C.3. Zoning

a. Is the site of the proposed action located in a municipality with an adopted zoning law or ordinance. ☑ Yes ☐ No
If Yes, what is the zoning classification(s) including any applicable overlay district?
LDL - Low Density Residential

b. Is the use permitted or allowed by a special or conditional use permit? ☑ Yes ☐ No

c. Is a zoning change requested as part of the proposed action? ☐ Yes ☑ No
If Yes,
i. What is the proposed new zoning for the site?

C.4. Existing community services.

a. In what school district is the project site located? Pembroke Central School District

b. What police or other public protection forces serve the project site?
Village of Corfu Police Department; Genesee County Sheriff's Office; New York State Police

c. Which fire protection and emergency medical services serve the project site?
Corfu Fire Department

d. What parks serve the project site?
Darien Lake State Park

D. Project Details

D.1. Proposed and Potential Development

a. What is the general nature of the proposed action (e.g., residential, industrial, commercial, recreational; if mixed, include all components)? wireless telecommunications facility

b. a. Total acreage of the site of the proposed action? 1.540 acres
b. Total acreage to be physically disturbed? 0.230 acres
c. Total acreage (project site and any contiguous properties) owned or controlled by the applicant or project sponsor? 111.10 acres

c. Is the proposed action an expansion of an existing project or use? ☐ Yes ☑ No
i. If Yes, what is the approximate percentage of the proposed expansion and identify the units (e.g., acres, miles, housing units, square feet)? % Units:

d. Is the proposed action a subdivision, or does it include a subdivision? ☐ Yes ☑ No
If Yes,
i. Purpose or type of subdivision? (e.g., residential, industrial, commercial; if mixed, specify types)
ii. Is a cluster/conservation layout proposed? ☐ Yes ☐ No
iii. Number of lots proposed?
iv. Minimum and maximum proposed lot sizes? Minimum Maximum

e. Will proposed action be constructed in multiple phases? ☐ Yes ☑ No
i. If No, anticipated period of construction: months
ii. If Yes:
- Total number of phases anticipated
- Anticipated commencement date of phase 1 (including demolition) month year
- Anticipated completion date of final phase month year
- Generally describe connections or relationships among phases, including any contingencies where progress of one phase may determine timing or duration of future phases:

f. Does the project include new residential uses? ☐Yes ☑No

If Yes, show numbers of units proposed.

	One Family	Two Family	Three Family	Multiple Family (four or more)
Initial Phase				
At completion of all phases				

g. Does the proposed action include new non-residential construction (including expansions)? ☑Yes ☐No

If Yes,

i. Total number of structures 2

ii. Dimensions (in feet) of largest proposed structure: 115' height; ~8'D width; and _____ length

iii. Approximate extent of building space to be heated or cooled: 0 square feet

h. Does the proposed action include construction or other activities that will result in the impoundment of any liquids, such as creation of a water supply, reservoir, pond, lake, waste lagoon or other storage? ☐Yes ☐No

If Yes,

i. Purpose of the impoundment: _____

ii. If a water impoundment, the principal source of the water: ☐ Ground water ☐ Surface water streams ☐Other specify: _____

iii. If other than water, identify the type of impounded/contained liquids and their source. _____

iv. Approximate size of the proposed impoundment. Volume: _____ million gallons; surface area: _____ acres

v. Dimensions of the proposed dam or impounding structure: _____ height; _____ length

vi. Construction method/materials for the proposed dam or impounding structure (e.g., earth fill, rock, wood, concrete): _____

D.2. Project Operations

a. Does the proposed action include any excavation, mining, or dredging, during construction, operations, or both? (Not including general site preparation, grading or installation of utilities or foundations where all excavated materials will remain onsite) ☐Yes ☑No

If Yes:

i. What is the purpose of the excavation or dredging? _____

ii. How much material (including rock, earth, sediments, etc.) is proposed to be removed from the site?

- Volume (specify tons or cubic yards): _____
- Over what duration of time? _____

iii. Describe nature and characteristics of materials to be excavated or dredged, and plans to use, manage or dispose of them. _____

iv. Will there be onsite dewatering or processing of excavated materials? ☐Yes ☐No

If yes, describe. _____

v. What is the total area to be dredged or excavated? _____ acres

vi. What is the maximum area to be worked at any one time? _____ acres

vii. What would be the maximum depth of excavation or dredging? _____ feet

viii. Will the excavation require blasting? ☐Yes ☐No

ix. Summarize site reclamation goals and plan: _____

b. Would the proposed action cause or result in alteration of, increase or decrease in size of, or encroachment into any existing wetland, waterbody, shoreline, beach or adjacent area? ☐Yes ☑No

If Yes:

i. Identify the wetland or waterbody which would be affected (by name, water index number, wetland map number or geographic description): _____

ii. Describe how the proposed action would affect that waterbody or wetland, e.g. excavation, fill, placement of structures, or alteration of channels, banks and shorelines. Indicate extent of activities, alterations and additions in square feet or acres:

_____

_____

_____

_____

iii. Will proposed action cause or result in disturbance to bottom sediments? ☐Yes☐No

If Yes, describe: _____

iv. Will proposed action cause or result in the destruction or removal of aquatic vegetation? ☐Yes☐No

If Yes:

- acres of aquatic vegetation proposed to be removed: _____
- expected acreage of aquatic vegetation remaining after project completion: _____
- purpose of proposed removal (e.g. beach clearing, invasive species control, boat access): _____

_____

- proposed method of plant removal: _____
- if chemical/herbicide treatment will be used, specify product(s): _____

v. Describe any proposed reclamation/mitigation following disturbance: _____

_____

c. Will the proposed action use, or create a new demand for water? ☐Yes☑No

If Yes:

i. Total anticipated water usage/demand per day: _____ gallons/day

ii. Will the proposed action obtain water from an existing public water supply? ☐Yes☐No

If Yes:

- Name of district or service area: _____
- Does the existing public water supply have capacity to serve the proposal? ☐Yes☐No
- Is the project site in the existing district? ☐Yes☐No
- Is expansion of the district needed? ☐Yes☐No
- Do existing lines serve the project site? ☐Yes☐No

iii. Will line extension within an existing district be necessary to supply the project? ☐Yes☐No

If Yes:

- Describe extensions or capacity expansions proposed to serve this project: _____

_____

- Source(s) of supply for the district: _____

iv. Is a new water supply district or service area proposed to be formed to serve the project site? ☐Yes☐No

If, Yes:

- Applicant/sponsor for new district: _____
- Date application submitted or anticipated: _____
- Proposed source(s) of supply for new district: _____

v. If a public water supply will not be used, describe plans to provide water supply for the project: _____

_____

vi. If water supply will be from wells (public or private), maximum pumping capacity: _____ gallons/minute.

d. Will the proposed action generate liquid wastes? ☐Yes☑No

If Yes:

i. Total anticipated liquid waste generation per day: _____ gallons/day

ii. Nature of liquid wastes to be generated (e.g., sanitary wastewater, industrial; if combination, describe all components and approximate volumes or proportions of each): _____

_____

_____

iii. Will the proposed action use any existing public wastewater treatment facilities? ☐Yes☐No

If Yes:

- Name of wastewater treatment plant to be used: _____
- Name of district: _____
- Does the existing wastewater treatment plant have capacity to serve the project? ☐Yes☐No
- Is the project site in the existing district? ☐Yes☐No
- Is expansion of the district needed? ☐Yes☐No

- Do existing sewer lines serve the project site? ☐Yes ☐No
- Will line extension within an existing district be necessary to serve the project? ☐Yes ☐No

  If Yes:
  - Describe extensions or capacity expansions proposed to serve this project: _____

iv. Will a new wastewater (sewage) treatment district be formed to serve the project site? ☐Yes ☐No

If Yes:
- Applicant/sponsor for new district: _____
- Date application submitted or anticipated: _____
- What is the receiving water for the wastewater discharge? _____

v. If public facilities will not be used, describe plans to provide wastewater treatment for the project, including specifying proposed receiving water (name and classification if surface discharge, or describe subsurface disposal plans):

vi. Describe any plans or designs to capture, recycle or reuse liquid waste: _____

e. Will the proposed action disturb more than one acre and create stormwater runoff, either from new point sources (i.e. ditches, pipes, swales, curbs, gutters or other concentrated flows of stormwater) or non-point source (i.e. sheet flow) during construction or post construction? ☐Yes ☑No

If Yes:

i. How much impervious surface will the project create in relation to total size of project parcel?

_____ Square feet or _____ acres (impervious surface)

_____ Square feet or _____ acres (parcel size)

ii. Describe types of new point sources. _____

iii. Where will the stormwater runoff be directed (i.e. on-site stormwater management facility/structures, adjacent properties, groundwater, on-site surface water or off-site surface waters)?

- If to surface waters, identify receiving water bodies or wetlands: _____
- Will stormwater runoff flow to adjacent properties? ☐Yes ☐No

iv. Does proposed plan minimize impervious surfaces, use pervious materials or collect and re-use stormwater? ☐Yes ☐No

f. Does the proposed action include, or will it use on-site, one or more sources of air emissions, including fuel combustion, waste incineration, or other processes or operations? ☑Yes ☐No

If Yes, identify:

i. Mobile sources during project operations (e.g., heavy equipment, fleet or delivery vehicles)

Construction only - crane, excavator, tractor trailer deliveries, fleet vehicles

ii. Stationary sources during construction (e.g., power generation, structural heating, batch plant, crushers)

N/A

iii. Stationary sources during operations (e.g., process emissions, large boilers, electric generation)

N/A

g. Will any air emission sources named in D.2.f (above), require a NY State Air Registration, Air Facility Permit, or Federal Clean Air Act Title IV or Title V Permit? ☐Yes ☑No

If Yes:

i. Is the project site located in an Air quality non-attainment area? (Area routinely or periodically fails to meet ambient air quality standards for all or some parts of the year) ☐Yes ☐No

ii. In addition to emissions as calculated in the application, the project will generate:
- _____Tons/year (short tons) of Carbon Dioxide (CO_2)
- _____Tons/year (short tons) of Nitrous Oxide (N_2O)
- _____Tons/year (short tons) of Perfluorocarbons (PFCs)
- _____Tons/year (short tons) of Sulfur Hexafluoride (SF_6)
- _____Tons/year (short tons) of Carbon Dioxide equivalent of Hydroflourocarbons (HFCs)
- _____Tons/year (short tons) of Hazardous Air Pollutants (HAPs)

h. Will the proposed action generate or emit methane (including, but not limited to, sewage treatment plants, landfills, composting facilities)? ☐Yes ☑No

If Yes:

i. Estimate methane generation in tons/year (metric): _____

ii. Describe any methane capture, control or elimination measures included in project design (e.g., combustion to generate heat or electricity, flaring): _____

i. Will the proposed action result in the release of air pollutants from open-air operations or processes, such as quarry or landfill operations? ☐Yes ☑No

If Yes: Describe operations and nature of emissions (e.g., diesel exhaust, rock particulates/dust):

_____

j. Will the proposed action result in a substantial increase in traffic above present levels or generate substantial new demand for transportation facilities or services? ☐Yes ☑No

If Yes:

i. When is the peak traffic expected (Check all that apply): ☐ Morning ☐ Evening ☐Weekend
☐ Randomly between hours of _____ to _____.

ii. For commercial activities only, projected number of semi-trailer truck trips/day: _____

iii. Parking spaces: Existing _____ Proposed _____ Net increase/decrease _____

iv. Does the proposed action include any shared use parking? ☐Yes ☐No

v. If the proposed action includes any modification of existing roads, creation of new roads or change in existing access, describe:

_____

vi. Are public/private transportation service(s) or facilities available within ½ mile of the proposed site? ☐Yes ☐No

vii Will the proposed action include access to public transportation or accommodations for use of hybrid, electric or other alternative fueled vehicles? ☐Yes ☐No

viii. Will the proposed action include plans for pedestrian or bicycle accommodations for connections to existing pedestrian or bicycle routes? ☐Yes ☐No

k. Will the proposed action (for commercial or industrial projects only) generate new or additional demand for energy? ☑Yes ☐No

If Yes:

i. Estimate annual electricity demand during operation of the proposed action: _____
<400A

ii. Anticipated sources/suppliers of electricity for the project (e.g., on-site combustion, on-site renewable, via grid/local utility, or other):
grid/local utility

iii. Will the proposed action require a new, or an upgrade to, an existing substation? ☐Yes ☑No

l. Hours of operation. Answer all items which apply.

i. During Construction:
- Monday - Friday: _____
- Saturday: _____
- Sunday: _____
- Holidays: _____

ii. During Operations:
- Monday - Friday: _____
- Saturday: _____
- Sunday: _____
- Holidays: _____

m. Will the proposed action produce noise that will exceed existing ambient noise levels during construction, operation, or both? ☐Yes ☑No

If yes:

i. Provide details including sources, time of day and duration:

ii. Will proposed action remove existing natural barriers that could act as a noise barrier or screen? ☐Yes ☐No

Describe:

n.. Will the proposed action have outdoor lighting? ☐Yes ☑No

If yes:

i. Describe source(s), location(s), height of fixture(s), direction/aim, and proximity to nearest occupied structures:

ii. Will proposed action remove existing natural barriers that could act as a light barrier or screen? ☐Yes ☐No

Describe:

o. Does the proposed action have the potential to produce odors for more than one hour per day? ☐Yes ☑No

If Yes, describe possible sources, potential frequency and duration of odor emissions, and proximity to nearest occupied structures:

p. Will the proposed action include any bulk storage of petroleum (combined capacity of over 1,100 gallons) or chemical products 185 gallons in above ground storage or any amount in underground storage? ☐Yes ☑No

If Yes:

i. Product(s) to be stored

ii. Volume(s) _____ per unit time _____ (e.g., month, year)

iii. Generally describe proposed storage facilities:

q. Will the proposed action (commercial, industrial and recreational projects only) use pesticides (i.e., herbicides, insecticides) during construction or operation? ☐ Yes ☑No

If Yes:

i. Describe proposed treatment(s):

ii. Will the proposed action use Integrated Pest Management Practices? ☐ Yes ☐No

r. Will the proposed action (commercial or industrial projects only) involve or require the management or disposal of solid waste (excluding hazardous materials)? ☐ Yes ☑No

If Yes:

i. Describe any solid waste(s) to be generated during construction or operation of the facility:

- Construction: _____ tons per _____ (unit of time)
- Operation : _____ tons per _____ (unit of time)

ii. Describe any proposals for on-site minimization, recycling or reuse of materials to avoid disposal as solid waste:

- Construction:
- Operation:

iii. Proposed disposal methods/facilities for solid waste generated on-site:

- Construction:
- Operation:

s. Does the proposed action include construction or modification of a solid waste management facility? ☐ Yes ☑ No

If Yes:

i. Type of management or handling of waste proposed for the site (e.g., recycling or transfer station, composting, landfill, or other disposal activities): _____

ii. Anticipated rate of disposal/processing:

- _____ Tons/month, if transfer or other non-combustion/thermal treatment, or
- _____ Tons/hour, if combustion or thermal treatment

iii. If landfill, anticipated site life: _____ years

t. Will proposed action at the site involve the commercial generation, treatment, storage, or disposal of hazardous waste? ☐ Yes ☑ No

If Yes:

i. Name(s) of all hazardous wastes or constituents to be generated, handled or managed at facility: _____

ii. Generally describe processes or activities involving hazardous wastes or constituents: _____

iii. Specify amount to be handled or generated _____ tons/month

iv. Describe any proposals for on-site minimization, recycling or reuse of hazardous constituents: _____

v. Will any hazardous wastes be disposed at an existing offsite hazardous waste facility? ☐ Yes ☐ No

If Yes: provide name and location of facility: _____

If No: describe proposed management of any hazardous wastes which will not be sent to a hazardous waste facility:

E. Site and Setting of Proposed Action

E.1. Land uses on and surrounding the project site

a. Existing land uses.

i. Check all uses that occur on, adjoining and near the project site.

☐ Urban ☐ Industrial ☐ Commercial ☐ Residential (suburban) ☑ Rural (non-farm)
☐ Forest ☑ Agriculture ☐ Aquatic ☐ Other (specify): _____

ii. If mix of uses, generally describe:

b. Land uses and covertypes on the project site.

Land use or Covertype	Current Acreage	Acreage After Project Completion	Change (Acres +/-)
• Roads, buildings, and other paved or impervious surfaces	Unknown	Same Acreage	0
• Forested	Unknown	Same Acreage	0
• Meadows, grasslands or brushlands (non-agricultural, including abandoned agricultural)	Unknown	Same -0.23 acres	-0.23 acres
• Agricultural (includes active orchards, field, greenhouse etc.)	Unknown	Same Acreage	0
• Surface water features (lakes, ponds, streams, rivers, etc.)	Unknown	Same Acreage	0
• Wetlands (freshwater or tidal)	Unknown	Same Acreage	0
• Non-vegetated (bare rock, earth or fill)	Unknown	Same +0.23 acres	+0.23 acres
• Other Describe: _____			

c. Is the project site presently used by members of the community for public recreation? ☐Yes ☑No

i. If Yes: explain: _____

d. Are there any facilities serving children, the elderly, people with disabilities (e.g., schools, hospitals, licensed day care centers, or group homes) within 1500 feet of the project site? ☐Yes ☑No

If Yes,

i. Identify Facilities:

_____

_____

e. Does the project site contain an existing dam? ☐Yes ☑No

If Yes:

i. Dimensions of the dam and impoundment:

- Dam height: _____ feet
- Dam length: _____ feet
- Surface area: _____ acres
- Volume impounded: _____ gallons OR acre-feet

ii. Dam's existing hazard classification: _____

iii. Provide date and summarize results of last inspection:

_____

_____

f. Has the project site ever been used as a municipal, commercial or industrial solid waste management facility, or does the project site adjoin property which is now, or was at one time, used as a solid waste management facility? ☐Yes ☑No

If Yes:

i. Has the facility been formally closed? ☐Yes ☐ No

- If yes, cite sources/documentation: _____

ii. Describe the location of the project site relative to the boundaries of the solid waste management facility:

_____

_____

iii. Describe any development constraints due to the prior solid waste activities: _____

_____

g. Have hazardous wastes been generated, treated and/or disposed of at the site, or does the project site adjoin property which is now or was at one time used to commercially treat, store and/or dispose of hazardous waste? ☐Yes ☑No

If Yes:

i. Describe waste(s) handled and waste management activities, including approximate time when activities occurred:

_____

_____

h. Potential contamination history. Has there been a reported spill at the proposed project site, or have any remedial actions been conducted at or adjacent to the proposed site? ☐Yes ☑ No

If Yes:

i. Is any portion of the site listed on the NYSDEC Spills Incidents database or Environmental Site Remediation database? Check all that apply: ☐Yes ☐No

☐ Yes – Spills Incidents database Provide DEC ID number(s): _____

☐ Yes – Environmental Site Remediation database Provide DEC ID number(s): _____

☐ Neither database

ii. If site has been subject of RCRA corrective activities, describe control measures: _____

_____

_____

iii. Is the project within 2000 feet of any site in the NYSDEC Environmental Site Remediation database? ☐Yes ☑No

If yes, provide DEC ID number(s): _____

iv. If yes to (i), (ii) or (iii) above, describe current status of site(s):

_____

_____

v. Is the project site subject to an institutional control limiting property uses? ☐Yes ☑No

- If yes, DEC site ID number: _____
- Describe the type of institutional control (e.g., deed restriction or easement): _____
- Describe any use limitations: _____
- Describe any engineering controls: _____
- Will the project affect the institutional or engineering controls in place? ☐Yes ☐No
- Explain: _____

E.2. Natural Resources On or Near Project Site

a. What is the average depth to bedrock on the project site? _____ feet

b. Are there bedrock outcroppings on the project site? ☐Yes ☑No
If Yes, what proportion of the site is comprised of bedrock outcroppings? _____ %

c. Predominant soil type(s) present on project site:

Canadaigua silt loam	34 %
Collamer silt loam	33 %
Ovid silt loam	33 %

d. What is the average depth to the water table on the project site? Average: _____ feet

e. Drainage status of project site soils:

☐ Well Drained:	____% of site
☑ Moderately Well Drained:	66 % of site
☑ Poorly Drained	34 % of site

f. Approximate proportion of proposed action site with slopes:

☑ 0-10%:	100 % of site
☐ 10-15%:	____% of site
☐ 15% or greater:	____% of site

g. Are there any unique geologic features on the project site? ☐Yes ☑No
If Yes, describe: _____

h. Surface water features.

i. Does any portion of the project site contain wetlands or other waterbodies (including streams, rivers, ponds or lakes)? ☑Yes ☐No

ii. Do any wetlands or other waterbodies adjoin the project site? ☑Yes ☐No

If Yes to either *i* or *ii*, continue. If No, skip to E.2.i.

iii. Are any of the wetlands or waterbodies within or adjoining the project site regulated by any federal, state or local agency? ☑Yes ☐No

iv. For each identified regulated wetland and waterbody on the project site, provide the following information:

- Streams: Name _____ Classification _____
- Lakes or Ponds: Name _____ Classification _____
- Wetlands: Name Federal Waters, Federal Waters, Federal Waters Approximate Size _____
- Wetland No. (if regulated by DEC) _____

v. Are any of the above water bodies listed in the most recent compilation of NYS water quality-impaired waterbodies? ☐Yes ☑No

If yes, name of impaired water body/bodies and basis for listing as impaired: _____

i. Is the project site in a designated Floodway? ☐Yes ☑No

j. Is the project site in the 100 year Floodplain? ☐Yes ☑No

k. Is the project site in the 500 year Floodplain? ☐Yes ☑No

l. Is the project site located over, or immediately adjoining, a primary, principal or sole source aquifer? ☐Yes ☑No
If Yes:

i. Name of aquifer: _____

m. Identify the predominant wildlife species that occupy or use the project site: _____

n. Does the project site contain a designated significant natural community? ☐Yes ☑No

If Yes:

i. Describe the habitat/community (composition, function, and basis for designation): _____

ii. Source(s) of description or evaluation: _____

iii. Extent of community/habitat:

- Currently: _____ acres
- Following completion of project as proposed: _____ acres
- Gain or loss (indicate + or -): _____ acres

o. Does project site contain any species of plant or animal that is listed by the federal government or NYS as endangered or threatened, or does it contain any areas identified as habitat for an endangered or threatened species? ☐Yes ☑No

p. Does the project site contain any species of plant or animal that is listed by NYS as rare, or as a species of special concern? ☐Yes ☑No

q. Is the project site or adjoining area currently used for hunting, trapping, fishing or shell fishing? ☐Yes ☑No

If yes, give a brief description of how the proposed action may affect that use: _____

E.3. Designated Public Resources On or Near Project Site

a. Is the project site, or any portion of it, located in a designated agricultural district certified pursuant to Agriculture and Markets Law, Article 25-AA, Section 303 and 304? ☑Yes ☐No

If Yes, provide county plus district name/number: GENE001

b. Are agricultural lands consisting of highly productive soils present? ☑Yes ☐No

i. If Yes: acreage(s) on project site? 2.5 - Farmland of statewide importance, all areas are farmland, and prime farmland if drained

ii. Source(s) of soil rating(s): Web soil survey

c. Does the project site contain all or part of, or is it substantially contiguous to, a registered National Natural Landmark? ☐Yes ☑No

If Yes:

i. Nature of the natural landmark: ☐ Biological Community ☐ Geological Feature

ii. Provide brief description of landmark, including values behind designation and approximate size/extent: _____

d. Is the project site located in or does it adjoin a state listed Critical Environmental Area? ☐Yes ☑No

If Yes:

i. CEA name: _____

ii. Basis for designation: _____

iii. Designating agency and date: _____

e. Does the project site contain, or is it substantially contiguous to, a building, archaeological site, or district which is listed on, or has been nominated by the NYS Board of Historic Preservation for inclusion on, the State or National Register of Historic Places? ☐ Yes ☑ No

If Yes:

i. Nature of historic/archaeological resource: ☐ Archaeological Site ☐ Historic Building or District

ii. Name: _____

iii. Brief description of attributes on which listing is based:

_____

f. Is the project site, or any portion of it, located in or adjacent to an area designated as sensitive for archaeological sites on the NY State Historic Preservation Office (SHPO) archaeological site inventory? ☐ Yes ☑ No

g. Have additional archaeological or historic site(s) or resources been identified on the project site? ☐ Yes ☑ No

If Yes:

i. Describe possible resource(s): _____

ii. Basis for identification: _____

h. Is the project site within fives miles of any officially designated and publicly accessible federal, state, or local scenic or aesthetic resource? ☐ Yes ☑ No

If Yes:

i. Identify resource: _____

ii. Nature of, or basis for, designation (e.g., established highway overlook, state or local park, state historic trail or scenic byway, etc.): _____

iii. Distance between project and resource: _____ miles.

i. Is the project site located within a designated river corridor under the Wild, Scenic and Recreational Rivers Program 6 NYCRR 666? ☐ Yes ☑ No

If Yes:

i. Identify the name of the river and its designation: _____

ii. Is the activity consistent with development restrictions contained in 6NYCRR Part 666? ☐ Yes ☐ No

F. Additional Information

Attach any additional information which may be needed to clarify your project.

If you have identified any adverse impacts which could be associated with your proposal, please describe those impacts plus any measures which you propose to avoid or minimize them.

G. Verification

I certify that the information provided is true to the best of my knowledge.

Applicant/Sponsor Name Mike Eacho Date 12/5/2017

Signature _____ Title Project Manager, Northeast

PRINT FORM

EAF Mapper Summary Report

Wednesday, November 15, 2017 5:57 PM

Disclaimer: The EAF Mapper is a screening tool intended to assist project sponsors and reviewing agencies in preparing an environmental assessment form (EAF). Not all questions asked in the EAF are answered by the EAF Mapper. Additional information on any EAF question can be obtained by consulting the EAF Workbooks. Although the EAF Mapper provides the most up-to-date digital data available to DEC, you may also need to contact local or other data sources in order to obtain data not provided by the Mapper. Digital data is not a substitute for agency determinations.

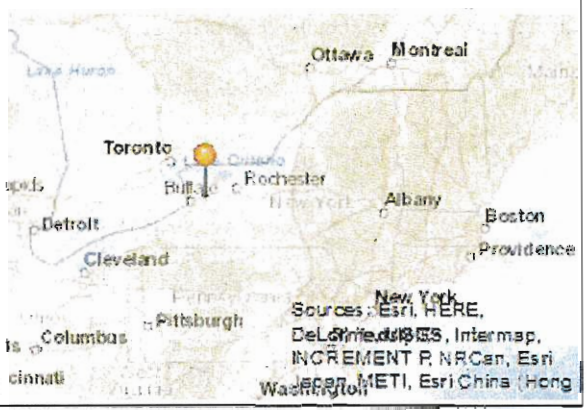

B.i.i [Coastal or Waterfront Area]	No
B.i.ii [Local Waterfront Revitalization Area]	No
C.2.b. [Special Planning District]	Digital mapping data are not available or are incomplete. Refer to EAF Workbook.
E.1.h [DEC Spills or Remediation Site - Potential Contamination History]	Digital mapping data are not available or are incomplete. Refer to EAF Workbook.
E.1.h.i [DEC Spills or Remediation Site - Listed]	Digital mapping data are not available or are incomplete. Refer to EAF Workbook.
E.1.h.i [DEC Spills or Remediation Site - Environmental Site Remediation Database]	Digital mapping data are not available or are incomplete. Refer to EAF Workbook.
E.1.h.iii [Within 2,000' of DEC Remediation Site]	No
E.2.g [Unique Geologic Features]	No
E.2.h.i [Surface Water Features]	Yes
E.2.h.ii [Surface Water Features]	Yes
E.2.h.iii [Surface Water Features]	Yes - Digital mapping information on local and federal wetlands and waterbodies is known to be incomplete. Refer to EAF Workbook.
E.2.h.iv [Surface Water Features - Wetlands Name]	Federal Waters
E.2.h.v [Impaired Water Bodies]	No
E.2.i. [Floodway]	Digital mapping data are not available or are incomplete. Refer to EAF Workbook.
E.2.j. [100 Year Floodplain]	Digital mapping data are not available or are incomplete. Refer to EAF Workbook.
E.2.k. [500 Year Floodplain]	Digital mapping data are not available or are incomplete. Refer to EAF Workbook.
E.2.l. [Aquifers]	No

E.2.n. [Natural Communities]	No
E.2.o. [Endangered or Threatened Species]	No
E.2.p. [Rare Plants or Animals]	No
E.3.a. [Agricultural District]	Yes
E.3.a. [Agricultural District]	GENE001
E.3.c. [National Natural Landmark]	No
E.3.d [Critical Environmental Area]	No
E.3.e. [National Register of Historic Places]	Digital mapping data are not available or are incomplete. Refer to EAF Workbook.
E.3.f. [Archeological Sites]	No
E.3.i. [Designated River Corridor]	No

CELLCO PARTNERSHIP

d.b.a. verizon wireless

WIRELESS COMMUNICATIONS FACILITY

SITE NUMBER: 201958

9657 FARGO ROAD
DARIEN, NY 14036
GENESEE COUNTY

SITE NAME: CORFU

GENERAL NOTES

THIS DOCUMENT IS THE CREATION, DESIGN, PROPERTY AND COPYRIGHTED WORK OF VERIZON. ANY DUPLICATION OR USE WITHOUT EXPRESS WRITTEN CONSENT IS STRICTLY PROHIBITED. DUPLICATION AND USE BY GOVERNMENT AGENCIES FOR THE PURPOSES OF CONDUCTING THEIR LAWFULLY AUTHORIZED REGULATORY AND ADMINISTRATIVE FUNCTIONS IS SPECIFICALLY ALLOWED.

THE FACILITY IS AN UNMANNED PRIVATE AND SECURED EQUIPMENT INSTALLATION. IT IS ONLY ACCESSED BY TRAINED TECHNICIANS FOR PERIODIC ROUTINE MAINTENANCE AND THEREFORE DOES NOT REQUIRE ANY WATER OR SANITARY SEWER SERVICE. THE FACILITY IS NOT GOVERNED BY REGULATIONS REQUIRING PUBLIC ACCESS PER ADA REQUIREMENTS.

CONTRACTOR SHALL VERIFY ALL PLANS AND EXISTING DIMENSIONS AND CONDITIONS ON THE JOB SITE AND SHALL IMMEDIATELY NOTIFY THE VERIZON NORTHEAST, LLC REPRESENTATIVE IN WRITING OF DISCREPANCIES BEFORE PROCEEDING WITH THE WORK OR BE RESPONSIBLE FOR SAME.

SPECIAL STRUCTURAL NOTES

TOWER OWNER SHALL PROVIDE GLOBAL STRUCTURAL STABILITY ANALYSIS OF EXISTING ANTENNA SUPPORT STRUCTURE. GENERAL CONTRACTOR SCOPE OF WORK SHALL INCLUDE ALL REQUIRED STRUCTURAL MODIFICATIONS, RE-BUNDLING OF COAXIAL CABLES OR OTHER SPECIAL MODIFICATIONS AS OUTLINED THEREIN.

PROJECT SUMMARY

SCOPE OF WORK:	UNMANNED TELECOMMUNICATIONS FACILITY VERIZON EQUIPMENT INSTALLATION
ZONING JURISDICTION:	(TOWN OF DARIEN)
SITE ADDRESS:	9657 FARGO ROAD DARIEN, NY 14036
LATITUDE:	42° 56' 51.50" N
LONGITUDE:	78° 26' 08.99" W
ASSESSOR'S LOT REFERENCE:	1-1-37.2 2-1-9.2
ZONING DISTRICT:	LOW DENSITY RESIDENTIAL (LDR)
JURISDICTION:	NATIONAL, STATE & LOCAL CODES OR ORDINANCES
CURRENT USE:	UNDEVELOPED LAND
PROPOSED USE:	TELECOMMUNICATIONS FACILITY
FEMA FLOOD HAZARD DESIGNATION:	ZONE X
TOWER OWNER:	AMERICAN TOWER CORPORATION 116 HUNTINGTON AVENUE 11TH FLOOR BOSTON, MA 02116
ATC SITE ID:	201958
ATC SITE NAME:	CORFU

APPROVALS

PROJECT MANAGER	DATE
CONSTRUCTION	DATE
RF ENGINEERING	DATE
ZONING / SITE ACQ.	DATE
OPERATIONS	DATE
TOWER OWNER	DATE

DRIVING DIRECTIONS:

FROM I-90:

TAKE EXIT 48A TURN RIGHT ONTO RT-77 / ALLEGHANY RD. 3.0 MI. TURN RIGHT ONTO RT-33 / W MAIN ST. 1.8 MI. TURN LEFT ONTO FARGO RD / CR-4. 0.5 MI.

ARRIVE AT ENTRANCE TO SITE ON THE RIGHT.

Dig Safely. New York Call 811 before you dig

CALL BEFORE YOU DIG

CALL TOLL FREE 1-800-962-7962

OR CALL 811

UNDERGROUND SERVICE ALERT

DRAWING INDEX

SHEET NO.	DESCRIPTION	REV.
T-1	TITLE SHEET	5
GN-1	GENERAL NOTES	5
V-101	ABUTTERS-PLAN	0
V-102	EXISTING CONDITIONS	0
V-103	EXISTING CONDITIONS	0
C-1	SITE PLAN	5
C-2	500' RADIUS PLAN	5
A-1	COMPOUND PLAN & ELEVATION	5
A-2	ANTENNA PLAN & DETAILS	5
A-3	EQUIPMENT DETAILS	5
A-4	PLATFORM & EQUIPMENT DETAILS	5
A-5	PLATFORM FOUNDATION DETAILS	5
A-6	EROSION CONTROL NOTES & DETIALS	5
E-1	ELECTRICAL DETAILS & NOTES	5
G-1	GROUNDING SCHEMATIC & RISER DIAGRAM	5
G-2	GROUNDING DETAILS	5

AMERICAN TOWER CORPORATION
116 HUNTINGTON AVE. 11TH FLOOR
BOSTON, MA 02116

CELLCO PARTNERSHIP D.B.A.
verizon

Hudson Design Engineering PLLC
29 HAMM ROAD
HUDSON, NY 12534
TEL: (978) 557-5553
FAX: (978) 336-5586

STATE OF NEW YORK
DEREK J. CREASER
094307-1
LICENSED PROFESSIONAL ENGINEER

CHECKED BY: AT

APPROVED BY: DJC

SUBMITTALS

REV.	DATE	DESCRIPTION	BY
5	11/28/17	REVISED FOR PERMITTING	SB
4	08/31/17	REVISED FOR PERMITTING	SB
3	07/17/17	REVISED FOR PERMITTING	SB
2	06/20/17	REVISED FOR PERMITTING	SB
1	04/27/17	ISSUED FOR PERMITTING	EB
0	04/18/17	ISSUED FOR REVIEW	SB

ATC SITE NUMBER:
201958
SITE NAME:
CORFU

SITE ADDRESS:
9657 FARGO ROAD
DARIEN, NY 14036
GENESEE COUNTY

SHEET TITLE
TITLE SHEET

SHEET NUMBER
T-1

GENERAL CONSTRUCTION NOTES:

1. ALL WORK SHALL CONFORM TO ALL CURRENT APPLICABLE FEDERAL, STATE, AND LOCAL CODES, INCLUDING ANSI/EIA/TIA-222, AND COMPLY WITH ATC MASTER SPECIFICATIONS FOR WIRELESS TOWER SITES.
2. CONTRACTOR SHALL CONTACT LOCAL 811 FOR IDENTIFICATION OF UNDERGROUND UTILITIES PRIOR TO START OF CONSTRUCTION.
3. CONTRACTOR IS RESPONSIBLE FOR COORDINATING ALL REQUIRED INSPECTIONS.
4. ALL DIMENSIONS TO, OF, AND ON EXISTING BUILDINGS, DRAINAGE STRUCTURES, AND SITE IMPROVEMENTS SHALL BE VERIFIED IN FIELD BY CONTRACTOR WITH ALL DISCREPANCIES REPORTED TO THE ENGINEER.
5. DO NOT CHANGE SIZE OR SPACING OF STRUCTURAL ELEMENTS.
6. DETAILS SHOWN ARE TYPICAL; SIMILAR DETAILS APPLY TO SIMILAR CONDITIONS UNLESS OTHERWISE NOTED.
7. THESE DRAWINGS DO NOT INCLUDE NECESSARY COMPONENTS FOR CONSTRUCTION SAFETY WHICH IS THE SOLE RESPONSIBILITY OF THE CONTRACTOR.
8. CONTRACTOR SHALL BRACE STRUCTURES UNTIL ALL STRUCTURAL ELEMENTS NEEDED FOR STABILITY ARE INSTALLED. THESE ELEMENTS ARE AS FOLLOWS: LATERAL BRACING, ANCHOR BOLTS, ETC.
9. CONTRACTOR SHALL DETERMINE EXACT LOCATION OF EXISTING UTILITIES, GROUNDS DRAINS, DRAIN PIPES, VENTS, ETC. BEFORE COMMENCING WORK.
10. INCORRECTLY FABRICATED, DAMAGED, OR OTHERWISE MISFITTING OR NONCONFORMING MATERIALS OR CONDITIONS SHALL BE REPORTED TO THE ATC CM PRIOR TO REMEDIAL OR CORRECTIVE ACTION. ANY SUCH REMEDIAL ACTION SHALL REQUIRE WRITTEN APPROVAL BY THE ATC CM PRIOR TO PROCEEDING.
11. EACH CONTRACTOR SHALL COOPERATE WITH THE ATC CM, AND COORDINATE HIS WORK WITH THE WORK OF OTHERS.
12. CONTRACTOR SHALL REPAIR ANY DAMAGE CAUSED BY CONSTRUCTION OF THIS PROJECT TO MATCH EXISTING PRE-CONSTRUCTION CONDITIONS TO THE SATISFACTION OF THE ATC CONSTRUCTION MANAGER.
13. ALL CABLE/CONDUIT ENTRY/EXIT PORTS SHALL BE WEATHERPROOFED DURING INSTALLATION USING A SILICONE SEALANT.
14. WHERE EXISTING CONDITIONS DO NOT MATCH THOSE SHOWN IN THIS PLAN SET, CONTRACTOR WILL NOTIFY THE ATC CONSTRUCTION MANAGER IMMEDIATELY.
15. CONTRACTOR SHALL ENSURE ALL SUBCONTRACTORS ARE PROVIDED WITH A COMPLETE AND CURRENT SET OF DRAWINGS AND SPECIFICATIONS FOR THIS PROJECT.
16. ALL ROOF WORK SHALL BE DONE BY A QUALIFIED AND EXPERIENCED ROOFING CONTRACTOR IN COORDINATION WITH ANY CONTRACTOR WARRANTING THE ROOF TO ENSURE THAT THE WARRANTY IS MAINTAINED.
17. CONTRACTOR SHALL REMOVE ALL RUBBISH AND DEBRIS FROM THE SITE AT THE END OF EACH DAY.
18. CONTRACTOR SHALL COORDINATE WORK SCHEDULE WITH LANDLORD AND TAKE PRECAUTIONS TO MINIMIZE IMPACT AND DISRUPTION OF OTHER OCCUPANTS OF THE FACILITY.
19. CONTRACTOR SHALL FURNISH ATC WITH THREE AS-BUILT SETS OF DRAWINGS UPON COMPLETION OF WORK.
20. PRIOR TO SUBMISSION OF BID, CONTRACTOR SHALL COORDINATE WITH ATC CM TO DETERMINE WHAT, IF ANY, ITEMS WILL BE PROVIDED. ALL ITEMS NOT PROVIDED SHALL BE PROVIDED AND INSTALLED BY THE CONTRACTOR. CONTRACTOR WILL INSTALL ALL ITEMS PROVIDED.
21. PRIOR TO SUBMISSION OF BID, CONTRACTOR WILL COORDINATE WITH ATC CONSTRUCTION MANAGER TO DETERMINE IF ANY PERMITS WILL BE OBTAINED BY ATC. ALL REQUIRED PERMITS NOT OBTAINED BY ATC MUST BE OBTAINED, AND PAID FOR, BY THE CONTRACTOR.
22. CONTRACTOR SHALL SUBMIT ALL SHOP DRAWINGS TO ATC FOR REVIEW AND APPROVAL PRIOR TO FABRICATION.
23. ALL EQUIPMENT SHALL BE INSTALLED ACCORDING TO MANUFACTURER'S SPECIFICATIONS AND LOCATED ACCORDING TO ATC SPECIFICATIONS, AND AS SHOWN IN THESE PLANS.
24. THE CONTRACTOR SHALL SUPERVISE AND DIRECT THE PROJECT DESCRIBED HEREIN. THE CONTRACTOR SHALL BE SOLELY RESPONSIBLE FOR ALL THE CONSTRUCTION MEANS, METHODS, TECHNIQUES, SEQUENCES AND PROCEDURES AND FOR COORDINATING ALL PORTIONS OF THE WORK UNDER THE CONTRACT.
25. CONTRACTOR SHALL NOTIFY ATC CM A MINIMUM OF 48 HOURS IN ADVANCE OF POURING CONCRETE OR BACKFILLING ANY UNDERGROUND UTILITIES, FOUNDATIONS OR SEALING ANY WALL, FLOOR OR ROOF PENETRATIONS FOR ENGINEERING REVIEW AND APPROVAL.

EROSION AND SEDIMENTATION CONTROL PLAN NOTES:

THIS PLAN HAS BEEN DEVELOPED TO PROVIDE A STRATEGY FOR CONTROLLING SOIL EROSION AND SEDIMENTATION DURING AND AFTER CONSTRUCTION OF THE PROPOSED FACILITY. THE EQUIPMENT ANTICIPATED TO BE USED FOR THE CONSTRUCTION INCLUDES THE FOLLOWING: BACKHOES, BULLDOZERS, LOADERS, TRUCKS, CRANES, COMPACTORS, AND GRADERS. THE FOLLOWING MEASURES WILL BE UNDERTAKEN TO PROVIDE MAXIMUM PROTECTION TO THE SOIL, WATER, AND ABUTTING LANDS:

1. ALL EARTH DISTURBANCE ACTIVITIES SHALL PROCEED IN ACCORDANCE WITH THE SEQUENCE PROVIDED ON THE PLAN DRAWINGS. DEVIATION FROM THAT SEQUENCE MUST BE APPROVED IN WRITING FROM AMERICAN TOWER PRIOR TO IMPLEMENTATION.
2. THE LIMITS OF DISTURBANCE (LOD) SHOULD BE MARKED PRIOR TO DISTURBANCE ACTIVITIES (I.E. SURVEY STAKES, POSTS & ROPE, CONSTRUCTION FENCE, ETC.).
3. A COPY OF THE SEDIMENT AND EROSION CONTROL PLAN MUST BE AVAILABLE AT THE PROJECT SITE DURING CONSTRUCTION UNTIL THE SITE IS STABILIZED. (AS APPLICABLE)
4. PRIOR TO GRUBBING OR ANY EARTHMOVING OPERATION, SILTATION FENCE WILL BE INSTALLED ACROSS THE SLOPE ON THE CONTOUR AT THE DOWNHILL LIMIT OF THE WORK AS PROTECTION AGAINST CONSTRUCTION RELATED EROSION. (CONSULT ATC CM AS REQUIRED)
5. STONE CHECK DAMS WILL BE INSTALLED IN THE DRAINAGE DITCHES TO PREVENT EROSION PRIOR TO THE STABILIZATION OF THE CHANNELS. EROSION CONTROL BLANKETS WILL ALSO BE INSTALLED IN ALL DITCHES TO BE REVEGETATED.
6. PERMANENT SOIL EROSION CONTROL MEASURES FOR ALL SLOPES, CHANNELS, DITCHES, OR ANY UNDISTURBED LAND AREA WILL BE COMPLETED WITHIN FIFTEEN CALENDAR DAYS AFTER FINAL GRADING HAS BEEN COMPLETED. WHEN IT IS NOT POSSIBLE OR PRACTICAL TO PERMANENTLY STABILIZE DISTURBED LAND, TEMPORARY EROSION CONTROL MEASURES WILL BE IMPLEMENTED WITHIN THIRTY CALENDAR DAYS OF EXPOSURE OF SOIL. ALL DISTURBED AREAS WILL BE MULCHED FOR EROSION CONTROL UPON COMPLETION OF ROUGH GRADING. CUT SLOPES IN COMPETENT BEDROCK AND ROCK FILLS NEED NOT BE VEGETATED.
7. ANY EXPOSED SLOPES GREATER THAN 2:1 AND NEWLY CONSTRUCTED DRAINAGE DITCHES WILL BE STABILIZED WITH EROSION CONTROL BLANKET TO PREVENT EROSION DURING CONSTRUCTION AND TO FACILITATE REVEGETATION AFTER LOAMING AND SEEDING.
8. TO PROVIDE PROTECTION AGAINST EROSION, RIPRAP WILL BE PLACED AT ALL CULVERT INLETS AND OUTLETS AS SHOWN ON THE ATTACHED DRAWINGS.
9. IN AREAS OF CONSTRUCTION DEWATERING, ISOLATED SETTLEMENT TRAPS WILL BE CONSTRUCTED ADJACENT TO THE ACTIVITY. WATER WILL BE PUMPED FROM THE EXCAVATIONS TO THESE DEPRESSION AREAS FOR SEDIMENT REMOVAL. ADDITIONAL SEDIMENTATION PROTECTION WILL BE PROVIDED BY THE INSTALLATION OF HAYBALE BARRIERS BETWEEN THE BASINS AND THE RECEIVING DRAINAGE COARSE.
10. NATIVE TOPSOIL SHALL BE SAVED, STOCKPILED, MULCHED, AND REUSED AS MUCH AS POSSIBLE ON THE SITE. SILTATION FENCE SHALL BE INSTALLED AT THE BASE OF STOCKPILES AT THE DOWNHILL LIMIT TO PROTECT AGAINST EROSION. STOCKPILES WILL BE STABILIZED BY SEEDING AND MULCHING UPON FORMATION OF THE PILES. UPHILL OF THE STOCKPILES, STABILIZED DITCHES AND/OR BERMS WILL BE CONSTRUCTED TO DIVERT STORMWATER RUNOFF AWAY FROM THE PILES.
11. FINAL SEEDING WILL BE APPLIED IN ACCORDANCE WITH THE AMERICAN TOWER CORPORATION MASTER SPECIFICATION.
12. SHOULD CONSTRUCTION OCCUR AFTER NOVEMBER 15, ADDITIONAL EROSION CONTROL METHODS WILL BE IMPLEMENTED. ALL DISTURBED AREAS WILL BE MINIMIZED AS MUCH AS POSSIBLE. PRIOR TO FREEZING, ADDITIONAL EROSION CONTROL DEVICES WILL BE INSTALLED AS APPROPRIATE INSPECTION OF THESE EROSION CONTROL ITEMS WILL BE CONSTANT, WITH PARTICULAR ATTENTION PAID TO WEATHER PREDICTIONS TO ENSURE THAT THESE MEASURES ARE PROPERLY IN PLACE TO HANDLE LARGE AMOUNTS OF RUNOFF FROM HEAVY RAINS OR THAWS.
13. FOR AN EARTH DISTURBANCE ACTIVITY OR ANY STAGE OR PHASE OF AN ACTIVITY TO BE CONSIDERED PERMANENTLY STABILIZED, THE DISTURBED AREAS SHALL BE COVERED BY A MINIMUM UNIFORM 70% PERENNIAL VEGETATIVE COVER OR OTHER PERMANENT NON-VEGETATIVE COVER WITH A DENSITY SUFFICIENT TO RESIST ACCELERATED EROSION AND SUBSURFACE CHARACTERISTICS SUFFICIENT TO RESIST SLIDING AND OTHER MOVEMENTS.
14. THE CONTRACTOR WILL REGULARLY INSPECT THE PROJECT'S EROSION AND SEDIMENTATION CONTROLS DURING THE ENTIRE ACTIVE CONSTRUCTION STAGES. THE INSPECTIONS WILL BE PERFORMED WEEKLY AND AFTER ALL RUNOFF EVENTS. THE CONTRACTOR WILL BE RESPONSIBLE FOR THE INSTALLATION, OPERATION, MAINTENANCE, AND REMOVAL OF ALL EROSION AND SEDIMENTATION CONTROLS. ALL PREVENTATIVE AND REMEDIAL MAINTENANCE WORK, INCLUDING CLEAN OUT REPAIR, REPLACEMENT, REGRADING, RESEEDING, REMULCHING, AND RENETTING MUST BE PERFORMED IMMEDIATELY. SEDIMENT THAT HAS BEEN TRAPPED BY THE SILT BARRIER WILL BE REMOVED AS REQUIRED, AND IN ALL CASES, BEFORE THE ACCUMULATION HAS REACHED HALF THE HEIGHT OF THE FENCE. THE SILT BARRIER WILL BE RE-ANCHORED, REPAIRED, OR REPLACED AS NECESSARY. ALL OTHER CONTROLS WILL BE INSPECTED ON THE SAME SCHEDULE. IF EROSION AND SEDIMENT CONTROL BMP'S FAIL TO PERFORM AS EXPECTED, REPLACEMENT BMP'S, OR MODIFICATION OF THOSE INSTALLED WILL BE REQUIRED.
15. ALL FILLS SHALL BE COMPACTED AS REQUIRED TO REDUCE EROSION, SLIPPAGE, SETTLEMENT, SUBSIDENCE OR OTHER RELATED PROBLEMS. FILL INTENDED TO SUPPORT BUILDINGS, STRUCTURES AND CONDUITS, ETC. SHALL BE COMPACTED IN ACCORDANCE WITH LOCAL REQUIREMENTS OR CODES.
16. ALL EARTHEN FILLS SHALL BE PLACED IN COMPACTED LAYERS NOT TO EXCEED 9 INCHES IN THICKNESS.
17. FILL MATERIALS SHALL BE FREE OF FROZEN PARTICLES, BRUSH, ROOTS, SOD, OR OTHER FOREIGN OR OBJECTIONABLE MATERIALS THAT WOULD INTERFERE WITH OR PREVENT CONSTRUCTION OF SATISFACTORY FILLS. FILL SHALL NOT BE PLACED ON SATURATED OR FROZEN SURFACES.
18. SEEPS OR SPRINGS ENCOUNTERED DURING CONSTRUCTION SHALL BE HANDLED IN ACCORDANCE WITH THE AMERICAN TOWER CORPORATION MASTER SPECIFICATION AND/OR THE CONTRACTOR SHALL NOTIFY THE ATC CONSTRUCTION MANAGER.
19. SEDIMENT TRACKED ONTO ANY PUBLIC ROADWAY OR SIDEWALK SHALL BE RETURNED TO THE CONSTRUCTION SITE BY THE END OF EACH WORK DAY AND DISPOSED IN THE MANNER DESCRIBED IN THIS PLAN. IN NO CASE SHALL THE SEDIMENT BE WASHED, SHOVELED, OR SWEPT INTO ANY ROADSIDE DITCH, STORM SEWER, OR SURFACE WATER.

CONSTRUCTION SEQUENCE:

1. INSTALL ROCK CONSTRUCTION ENTRANCE AND ALL PERIMETER BMP'S AS SHOWN ON THE PLANS.
2. CLEAR TREES AND LIMBS FOR FULL WIDTH OF EASEMENT AND LEASE AREA, GROUND TO SKY.
3. STRIP TOPSOIL FOR THE ACCESS DRIVE AND STORE AT DESIGNATED LOCATIONS AS SHOWN ON THE PLANS OR LOCATION AS AGREED UPON WITH THE ATC CONSTRUCTION MANAGER.
4. BEGIN GRADING AND INSTALL GRAVEL, ROADSIDE DITCHES, AND CULVERTS WITH OUTLET PROTECTION.
5. STRIP TOPSOIL ACROSS COMPOUND AND STORE AT DESIGNATED LOCATIONS AS SHOWN ON THE PLANS OR LOCATION AS AGREED UPON WITH THE ATC CONSTRUCTION MANAGER.
6. CONSTRUCT DETENTION AREA AND DITCHES DIVERTING RUNOFF AROUND THE COMPOUND TO THE DETENTION AREA. START DOWNSLOPE AT THE DETENTION AREA AND WORK UPGRADE.
7. GRADE COMPOUND SITE AND INSTALL GRAVEL. IMMEDIATELY STABILIZE FILL AND CUT SLOPES WITH EROSION CONTROL MATTING OR ROCK.
8. ONCE CONSTRUCTION OF COMPOUND AND ACCESS DRIVE IS COMPLETE, BEGIN CONSTRUCTION OF TOWER AND ASSOCIATED FACILITIES AND UTILITIES AS SHOWN ON THE DRAWINGS.
9. IF CONSTRUCTION IS TERMINATED OR SUSPENDED PRIOR TO CONSTRUCTION COMPLETION, ALL EXPOSED SOIL AREAS SHALL BE SEEDED WITH TEMPORARY SEEDING AND MULCHED IMMEDIATELY.
10. IT SHALL BE THE CONTRACTOR'S RESPONSIBILITY TO MAINTAIN ALL SEDIMENT AND EROSION CONTROL FACILITIES IN EFFECTIVE WORKING ORDER DURING CONSTRUCTION AND UNTIL ALL EXPOSED SOIL AREAS HAVE BEEN STABILIZED.
11. AFTER FINAL STABILIZATION HAS BEEN ACHIEVED, TEMPORARY BMP'S SHALL BE REMOVED. ACHIEVING 70% STABILIZATION, THE E&S CONTROLS CAN BE REMOVED. STONE IS CONSIDERED TO BE STABILIZED. AREAS DISTURBED DURING REMOVAL OR TEMPORARY E&S BMP'S REMOVAL ARE TO BE STABILIZED IMMEDIATELY.

CONCRETE AND REINFORCING STEEL NOTES:

1. DESIGN AND CONSTRUCTION OF ALL CONCRETE ELEMENTS SHALL CONFORM TO THE LATEST EDITIONS OF ALL APPLICABLE CODES INCLUDING: ACI 301 "SPECIFICATIONS FOR STRUCTURAL CONCRETE FOR BUILDINGS", AND ACI 318 "BUILDING CODE REQUIREMENTS FOR REINFORCED CONCRETE".
2. MIX DESIGN SHALL BE APPROVED BY OWNER'S REPRESENTATIVE AND SUBMITTED TO ENGINEER PRIOR TO PLACING CONCRETE.
3. CONCRETE SHALL BE NORMAL WEIGHT, 6 % AIR ENTRAINED (+/- 1.5%) WITH A MAXIMUM 4" SLUMP AND HAVE A MINIMUM 28-DAY COMPRESSIVE STRENGTH OF 4000 PSI UNLESS OTHERWISE NOTED.
4. THE FOLLOWING MATERIALS SHALL BE USED:
   - PORTLAND CEMENT: ASTM C-150, TYPE 1 OR 2
   - REINFORCEMENT: ASTM A-185, PLAIN STEEL WELDED WIRE FABRIC
   - REINFORCEMENT BARS: ASTM A615, GRADE 60, DEFORMED
   - NORMAL WEIGHT AGGREGATE: ASTM C-33
   - WATER: DRINKABLE
   - ADMIXTURES: NON-CHLORIDE CONTAINING
5. MINIMUM CONCRETE COVER FOR REINFORCING STEEL SHALL BE AS FOLLOWS (UNLESS OTHERWISE NOTED):
   - A. CONCRETE CAST AGAINST EARTH: 3"
   - B. ALL OTHER CONCRETE: 2"
6. A 3/4" CHAMFER SHALL BE PROVIDED AT ALL EXPOSED EDGES OF CONCRETE IN ACCORDANCE WITH ACI 301 SECTION 4.2.4, UNLESS NOTED OTHERWISE.
7. INSTALLATION OF CONCRETE EXPANSION/WEDGE ANCHOR SHALL BE PER MANUFACTURER'S WRITTEN RECOMMENDED PROCEDURE. THE ANCHOR BOLT, DOWEL, OR ROD SHALL CONFORM TO MANUFACTURER'S RECOMMENDATION FOR EMBEDMENT DEPTH OR AS SHOWN ON THE DRAWINGS. NO REBAR SHALL BE CUT WITHOUT PRIOR ATC CM APPROVAL WHEN DRILLING HOLES IN CONCRETE.
8. ADMIXTURES SHALL CONFORM TO THE APPROPRIATE ASTM STANDARD AS REFERENCED IN ACI 301.
9. DO NOT WELD OR TACK WELD REINFORCING STEEL.
10. ALL DOWELS, ANCHOR BOLTS, EMBEDDED STEEL, ELECTRICAL CONDUITS, PIPE SLEEVES, GROUNDS AND ALL OTHER EMBEDDED ITEMS AND FORMED DETAILS SHALL BE IN PLACE BEFORE START OF CONCRETE PLACEMENT.
11. REINFORCEMENT SHALL BE COLD BENT WHENEVER BENDING IS REQUIRED.
12. DO NOT PLACE CONCRETE IN WATER, ICE, OR ON FROZEN GROUND.
13. DO NOT ALLOW REINFORCEMENT, CONCRETE OR SUBBASE TO FREEZE DURING CONCRETE CURING AND SETTING PERIOD, OR FOR A MINIMUM OF 3 DAYS AFTER PLACEMENT.
14. FOR COLD-WEATHER AND HOT-WEATHER CONCRETE PLACEMENT, CONFORM TO APPLICABLE ACI CODES AND RECOMMENDATIONS. IN EITHER CASE, MATERIALS CONTAINING CHLORIDE, CALCIUM, SALTS, ETC. SHALL NOT BE USED. PROTECT FRESH CONCRETE FROM WEATHER FOR 7 DAYS, MINIMUM.
15. CONCRETE SHALL BE RUBBED TO A ROUGH GROUT FINISH. PADS SHALL BE SEALED BY STEEL TROWEL.
16. UNLESS OTHERWISE NOTED:
    - A. ALL REINFORCING STEEL SHALL BE DEFORMED BARS CONFORMING TO ASTM A615, GRADE 60.
    - B. WELDED WIRE FABRIC SHALL CONFORM TO ASTM A185.
17. SPLICING OF REINFORCEMENT IS PERMITTED ONLY AT LOCATIONS SHOWN IN THE CONTRACT DRAWINGS OR AS ACCEPTED BY THE ENGINEER. UNLESS OTHERWISE SHOWN OR NOTED REINFORCING STEEL SHALL BE SPLICED TO DEVELOP ITS FULL TENSILE CAPACITY (CLASS A) IN ACCORDANCE WITH ACI 318.
18. REINFORCING BAR DEVELOPMENT LENGTHS, AS COMPUTED IN ACCORDANCE WITH ACI 318, FORM THE BASIS FOR BAR EMBEDMENT LENGTHS AND BAR SPLICED LENGTHS SHOWN IN THE DRAWINGS. APPLY APPROPRIATE MODIFICATION FACTORS FOR TOP STEEL, BAR SPACING, COVER AND THE LIKE.
19. DETAILING OF REINFORCING STEEL SHALL CONFORM TO "ACI MANUAL OF STANDARD PRACTICE FOR DETAILING REINFORCED CONCRETE STRUCTURES" (ACI 315).
20. ALL SLAB CONSTRUCTION SHALL BE CAST MONOLITHICALLY WITHOUT HORIZONTAL CONSTRUCTION JOINTS, UNLESS SHOWN IN THE CONTRACT DRAWINGS.
21. LOCATION OF ALL CONSTRUCTION JOINTS ARE SUBJECT TO THE REQUIREMENTS OF THE CONTRACT DOCUMENTS, CONFORMANCE WITH ACI 318, AND ACCEPTANCE OF THE ENGINEER. DRAWINGS SHOWING LOCATION OF DETAILS OF THE PROPOSED CONSTRUCTION JOINTS SHALL BE SUBMITTED WITH REINFORCING STEEL PLACEMENT DRAWINGS
22. SPLICES OF WWF, AT ALL SPLICED EDGES, SHALL BE SUCH THAT THE OVERLAP MEASURED BETWEEN OUTERMOST CROSS WIRES OF EACH FABRIC SHEET IS NOT LESS THAN THE SPACING OF THE CROSS WIRE PLUS 2 INCHES, NOR LESS THAN 8".
23. BAR SUPPORTS SHALL BE ALL-GALVINIZED METAL WITH PLASTIC TIPS.
24. ALL REINFORCEMENT SHALL BE SECURELY TIED IN PLACE TO PREVENT DISPLACEMENT BY CONSTRUCTION TRAFFIC OR CONCRETE. TIE WIRE SHALL BE 16 GAUGE CONFORMING TO ASTM A82
25. SLAB ON GROUND
    - A. COMPACT STRUCTURAL FILL TO 95% DENSITY AND THEN PLACE 6" GRAVEL BENEATH SLAB.
    - B. PROVIDE VAPOR BARRIER BENEATH SLAB ON GROUND.

GENERAL FOUNDATION NOTES:

(APPLICABLE FOR EQUIPMENT SHELTER ONLY)

1. THOROUGHLY COMPACT BOTTOM OF EXCAVATIONS PRIOR TO PLACING RIGID INSULATION BARRIER. BACKFILL AND COMPACTION PROCEDURES SHALL BE DONE PER INDUSTRY STANDARDS.
2. ALL REINFORCING STEEL SHALL BE ASTM A615 - GRADE 60. SECURE REINFORCING IN PLACE TO PREVENT MOVEMENT DURING CONCRETE PLACEMENT.
3. VERIFY DETAILS AND DIMENSIONS WITH SHELTER DRAWINGS. NOTIFY ATC CM OF ANY DISCREPANCIES.
4. INSULATION BARRIER PROVIDED IS FOR FROST PROTECTION IN LIEU OF STANDARD FOUNDATIONS WITH BEARING AT CODE REQUIRED FROST DEPTH.
5. SHELTER MUST BE ANCHORED TO ITS FOUNDATION. ANCHOR IN ACCORDANCE WITH SHELTER MANUFACTURER SPECIFICATIONS.

AMERICAN TOWER CORPORATION
116 HUNTINGTON AVE. 11TH FLOOR
BOSTON, MA 02116

CELLCO PARTNERSHIP D.B.A.
verizon

Hudson Design Engineering PLLC
29 HAMM ROAD
HUDSON, NY 12534
TEL: (978) 557-5553
FAX: (978) 336-5586

STATE OF NEW YORK
DEREK J. CREASER
094307-1
LICENSED PROFESSIONAL ENGINEER

CHECKED BY: AT

APPROVED BY: DJC

SUBMITTALS

REV.	DATE	DESCRIPTION	BY
5	11/29/17	REVISED FOR PERMITTING	SB
4	08/31/17	REVISED FOR PERMITTING	SB
3	07/17/17	REVISED FOR PERMITTING	SB
2	06/20/17	REVISED FOR PERMITTING	SB
1	04/27/17	ISSUED FOR PERMITTING	EB
0	04/18/17	ISSUED FOR REVIEW	SB

ATC SITE NUMBER:
201958

SITE NAME:
CORFU

SITE ADDRESS:
9657 FARGO ROAD
DARIEN, NY 14036
GENESEE COUNTY

SHEET TITLE
GENERAL NOTES

SHEET NUMBER
GN-1

GENERAL NOTES:

1. Field work was performed by EDM total station.
2. The horizontal datum is New York State Plane West Zone (3103)NAD83 & the vertical datum is NAVD88, both are based on a post-processed dual frequency GPS survey.
3. All underground utility information presented hereon was determined from surface evidence and plans of record. All underground utilities should be located in the field prior to commencement of all site work. Call DigSafely New York 1-800-962-7962 a minimum of 72 hours prior to planned activity.
4. **This is not a boundary survey.**
5. All property lines shown are compiled from deeds, plans of record and monuments found. Abutting property lines are taken from the County of Niagara's Real Property Tax Department & are approximate only.
6. According to Federal Emergency Management Agency maps, site is located in Zone C; Area outside 500 year flood. Community Panel No. 361140 A, Panel No. 02; Effective Date: July 6, 1984.

THIS PLAN WAS PREPARED WITH THE BENEFIT OF A TITLE REPORT PREPARED BY STEWART TITLE GUARANTY COMPANY, FILE No. 142534NY, EFFECTIVE DATE APRIL 14, 2016. SAID TITLE REPORT CONTAINS THE FOLLOWING ENCUMBRANCES TO LOCUS AS SET FORTH IN SCHEDULE B, SECTION II:

1-11: NOT THE TYPE TO BE DEPICTED HEREON.

12. SUBJECT TO OIL AND GAS AGREEMENT BETWEEN KENNETH L. FEITSHANS AND GFS ENERGY, INC, RECORDED IN DEED BOOK 485 PAGE 117: NOT RETRACEABLE; NOT DEPICTED HEREON.

PARENT PARCEL DESCRIPTION:

ALL THAT TRACT OR PARCEL OF LAND, SITUATE IN THE TOWN OF DARIEN, COUNTY OF GENESEE AND STATE OF NEW YORK, BEING PART OF TOWNSHIP/11, RANGE 4 AND PART OF LOT 24, IN SAID TOWNSHIP, BOUNDED AND DESCRIBED AS FOLLOWS: BOUNDED WEST BY LAND DEEDED TO HIRAM K. STEELE, 60 CHAINS AND 65 LINKS; NORTH BY TOWNSHIP 12 IN THE FOURTH RANGE, 14 CHAINS AND 41 LINKS; EAST BY LAND DEEDED TO LEVI M. HARROUN, JAMES M. HARROUN AND GURDON HARTSHORN, 61 CHAINS AND 16 LINKS AND SOUTH BY LOT 23, 14 CHAINS AND 41 LINKS, CONTAINING 87 ½ ACRES BY THE SAME MORE OR LESS.

*ALL THAT TRACT OR PARCEL OF LAND, SITUATE IN THE TOWN OF DARIEN, COUNTY OF GENESEE, STATE OF NEW YORK, BEING PART OF LOT NO. 32, TOWNSHIP 11, RANGE 4 OF THE HOLLAND PURCHASE, BOUNDED AS FOLLOWS:
BEGINNING IN THE SOUTH LINE OF SAID LOT IN THE CENTER OF A PUBLIC HIGHWAY AND RUNNING THENCE EAST ON SAID SOUTH LINE 15 CHAINS 90 LINKS; THENCE NORTH 10 30" EAST, 10 CHAINS 17 LINKS; THENCE WEST PARALLEL WITH THE SOUTH LINE OF SAID LOT, 13 CHAINS 78 LINKS TO THE CENTER OF SAID HIGHWAY; THENCE SOUTHWESTERLY ALONG THE CENTER OF SAID HIGHWAY, 10 CHAINS 50 LINKS TO THE PLACE OF BEGINNING, CONTAINING 15.23 ACRES, MORE OR LESS.*

EXCEPTING AND RESERVING FROM THE ABOVE DESCRIBED PREMISES 7.62 ACRES OF LAND CONVEYED BY ELIZABETH STOCKLY TO HANNAH GREEN BY DEED RECORDED IN GENESEE COUNTY CLERK'S OFFICE IN LIBER 128, PAGE 260, BOUNDED AS FOLLOWS: BEGINNING AT THE SOUTH LINE OF SAID LOT IN THE CENTER OF A PUBLIC HIGHWAY AND RUNNING THENCE EAST ON SAID SOUTH LINE 15 CHAINS 90 LINKS THENCE NORTH 1° 30" EAST, 5 CHAINS 8 LINKS; THENCE WEST PARALLEL WITH THE SOUTH LINE OF SAID LOT 13 CHAINS 78 LINKS, TO THE CENTER OF SAID HIGHWAY; THENCE SOUTHWESTERLY ALONG THE CENTER OF SAID HIGHWAY 5 CHAINS 25 LINKS TO THE PLACE OF BEGININNING, CONTAINING 7.62 ACRES MORE OR LESS.

*ALL THAT TRACT OR PARCEL OF LAND, SITUATE IN SAID TOWN OF DARIEN, GENESEE COUNTY, NEW YORK, DISTINGUISHED AS BEING PART OF LOT 32, TOWNSHIP 11, RANGE 4 OF THE HOLLAND PURCHASE, BOUNDED AS FOLLOWS:
BEGINNING IN THE SOUTHEAST CORNER OF MRS. GROAT'S LAND AND RUNNING THENCE EAST 7 CHAINS 84 LINKS; THENCE NORTHERLY 16 CHAINS AND 76 LINKS TO A POINT 7 CHAINS 56 LINKS FROM THE EAST LINE OF THOMAS BENNETT'S LAND; THENCE WEST 7 CHAINS 67 LINKS TO SAID BENNETT'& EAST LINE; THENCE SOUTH 16 CHAINS 76 LINKS TO THE PLACE OF BEGINNING, CONTAINING 13 ACRES OF LAND, BE THE SAME MORE OR LESS.*

*ALL THAT TRACT OR PARCEL OF LAND, SITUATE IN THE TOWN OF DARIEN, COUNTY OF GENESEE AND STATE OF NEW YORK, BEING PART OF LOTS NOS. 24 AND 32, TOWNSHIP 11 AND RANGE 4 OF THE HOLLAND LAND COMPANY'S SURVEY, DESCRIBED AS FOLLOWS:
BEGINNING AT THE INTERSECTION OF THE EASTERLY BOUNDS OF LAND CONVEYED TO FRANK E. HAMPTON AND HELEN A. HAMPTON, HIS WIFE BY STANLEY KOWALIK AND MILDRED KOWALIK, HIS WIFE ON AUGUST 18, 1954 AND RECORDED IN THE GENESEE COUNTY CLERK'S OFFICE IN LIBER 310 AT PAGE 253, WITH SOUTHERLY BOUNDS OF LAND OF THE NEW YORK CENTRAL RAILROAD COMPANY; THENCE SOUTH ON THE EASTERLY BOUNDS OF LAND SO CONVEYED TO HAMPTON 3200.9 FEET TO THE NORTH BOUNDS OF LOT NO. 23; THENCE WEST ALONG THE NORTH BOUNDS OF SAID LOT NO. 23 AND THE NORTH BOUNDS OF LOT NO. 31, A DISTANCE OF 1271.16 FEET TO THE SOUTHEAST CORNER OF LAND CONVEYED TO JOHN BARRY BY CHAUNCEY B. ASHLEY AND PHILIP B. ASHLEY ON FEBRUARY 7, 1877 AND RECORDED IN LIBER 147 AT PAGE 42; THENCE NORTHERLY ALONG THE EASTERLY BOUNDS OF SAID BARRY'S LAND 1106.16 FEET TO THE NORTHEASTERLY CORNER THEREOF; THENCE WESTERLY ALONG SAID BARRY'S LAND 506.22 FEET TO THE NORTHWESTERLY CORNER THEREOF; THENCE NORTHERLY ALONG THE WESTERLY BOUNDS OF LAND CONVEYED TO HAMPTON ABOVE MENTIONED 1706.76 FEET TO THE SOUTHERLY BOUNDS OF LAND OF THE NEW YORK CENTRAL RAILROAD COMPANY; THENCE NORTHEASTERLY ALONG SAID RAILROAD COMPANY'S LAND 1877 FEET TO THE PLACE OF BEGINNING, CONTAINING 112 ACRES OF LAND MORE OR LESS.
*EXCEPTING AND RESERVING THEREFROM THE LAND DEEDED BY OREN LONG AND HANNAH LONG, HIS WIFE, TO SAMUEL C. HIGGINS, BY DEED DATED JULY 8, 1850, RECORDED IN LIBER 76 OF DEEDS, AT PAGE 215;
EXCEPTING ALSO THE LAND DEED BY OREN LONG AND HANNAH LONG, HIS WIFE, TO THE BUFFALO AND ROCHESTER RAILROAD COMPANY BY DEED RECORDED IN LIBER 79 OF DEEDS, AT PAGE 435.
EXCEPTING ALSO THEREFROM THE LAND DEEDED BY OREN LONG AND HANNAH LONG TO THE BUFFALO AND ROCHESTER RAILROAD COMPANY, BY DEED RECORDED IN LIBER 83 OF DEEDS AT PAGE 109.
EXCEPTING ALSO THE LAND DEEDED BY ROMEYN S. LANG AND ONE TO THE NEW YORK CENTRAL AND HUDSON RIVER RAIL ROAD COMPANY BY DEED RECORDED IN LIBER 140 OF DEEDS, AT PAGE 212.*

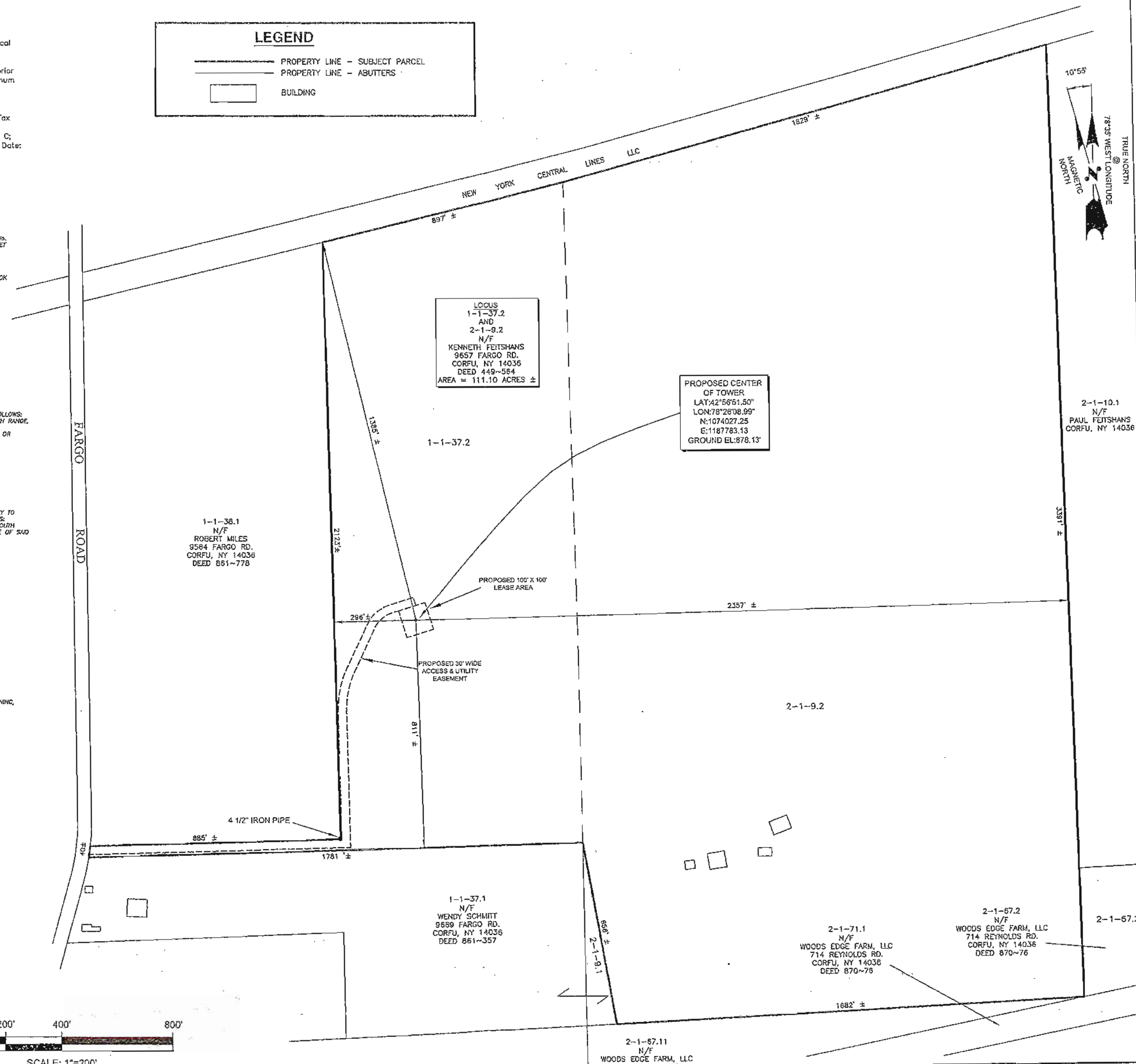

1 ABUTTERS PLAN

ZONING INFORMATION

DIMENSION REQUIREMENTS:	REQUIRED	PROPOSED±
FRONT YARD SETBACK:	50'	296'±
SIDE YARD SETBACK:	50'	1385'±, 811'±
REAR YARD SETBACK:	50'	2357'±

APPLICANT:	AMERICAN TOWER SERVICES 3500 REGENCY PARKWAY SUITE 100 CARY, NC 27518
OWNER:	KENNETH FEITSHANS 9657 FARGO ROAD CORFU, NY 14036
ZONING DISTRICT:	LOW DENSITY RESIDENTIAL (LDR)
JURISDICTION:	TOWN OF DARIEN
ASSESSOR'S ID:	1-1-37.2 AND 2-1-9.2

© 2015 by Lawson Surveying & Mapping, all rights reserved.

LAWSON SURVEYING & MAPPING
Boundary - Topographic - Control - Deformation - Construction - G.I.S. - Subdivision - G.P.S.
16 - 18 Reynolds Avenue, Oneonta, New York 13820
Phone: (607) 432-3500
Facsimile: (607) 432-5513
www.lawsonsurvey.com

AMERICAN TOWER®
ATC TOWER SERVICES
3500 REGENCY PARKWAY
SUITE 100
CARY, NC 27518
PHONE: (919) 468-0112

PYRAMID Network Services, LLC
6519 TOWPATH ROAD
EAST SYRACUSE, NY 13057
TEL: (315) 701-1300
FAX: (315) 445-0653

Hudson Design Engineering PLLC
29 HAMM ROAD
HUSON, NY 12534
TEL: (978) 557-5553
FAX: (978) 336-5586

REV.	DESCRIPTION	BY	DATE
△			
△			
△			
△			
△			

ATC SITE NUMBER:
201958

ATC SITE NAME:
ATC - CORFU A

SITE ADDRESS:
9657 FARGO ROAD
DARIEN, NY 14036

SEAL:

LAND SURVEYOR STATE OF NEW YORK

DRAWN BY:	JDJ
APPROVED BY:	RJL
DATE DRAWN:	11-4-2016
LSM JOB NO:	5634

ABUTTERS-PLAN

SHEET NUMBER:	REVISION:
V-101	0

Copyright © 2016 ATC IP LLC, All Rights Reserve

FARGO ROAD

LEGEND

- PROPERTY LINE – SUBJECT PARCEL
- PROPERTY LINE – ABUTTERS
- PROPOSED EASEMENT LINE
- ZONING SETBACK LINE
- CONTOUR LINE
- WATER COURSE
- WETLANDS LINE
- WETLANDS FLAG
- UTILITY POLE
- OVERHEAD UTILITY LINES
- TREE LINE
- DECIDUOUS TREE

ACCESS AND UTILITY EASEMENT

A CERTAIN EASEMENT LOCATED EAST OF FARGO ROAD IN THE TOWN OF DARIEN, COUNTY OF GENESEE, NEW YORK, CONTAINING 57,066.357 SQUARE FEET (1.310 ACRES) MORE OR LESS OF LAND, LOCATED WITHIN LAND OF THE GRANTORS DESCRIBED IN BOOK 449 PAGE 564, SAID PARCEL IS DESCRIBED AS FOLLOWS:
BEGINNING AT THE NORTHWEST CORNER OF A LEASE AREA, RUNNING THENCE ALONG THE BOUNDS OF SAID ACCESS AND UTILITY EASEMENT,
THE FOLLOWING FIFTEEN (15) COURSES AND DISTANCES:
S 72°51'59" E A DISTANCE OF 27.57' TO A POINT;
THENCE WITH A CURVE TO THE LEFT WITH AN ARC LENGTH OF 82.53',
WITH A RADIUS OF 100.00', WITH A DELTA ANGLE OF 47°17'49", TO A POINT;
THENCE S 25°34'10" W A DISTANCE OF 165.67' TO A POINT;
THENCE WITH A CURVE TO THE LEFT WITH AN ARC LENGTH OF 156.70',
WITH A RADIUS OF 335.00', WITH A DELTA ANGLE OF 26°48'01", TO A POINT;
THENCE S 01°13'51" E A DISTANCE OF 478.78' TO A POINT;
THENCE S 88°24'27" W A DISTANCE OF 937.34' TO A POINT;
THENCE N 08°41'32" E A DISTANCE OF 30.32' TO A POINT;
THENCE N 88°24'27" E A DISTANCE OF 903.16' TO A POINT;
THENCE N 01°13'51" W A DISTANCE OF 448.87' TO A POINT;
THENCE WITH A CURVE TO THE RIGHT WITH AN ARC LENGTH OF 170.73',
WITH A RADIUS OF 365.00', WITH A DELTA ANGLE OF 26°48'01", TO A POINT;
THENCE N 25°34'10" E A DISTANCE OF 165.67' TO A POINT;
THENCE WITH A CURVE TO THE RIGHT WITH AN ARC LENGTH OF 107.31',
WITH A RADIUS OF 130.00', WITH A DELTA ANGLE OF 47°17'49", TO A POINT;
THENCE N 72°51'59" E A DISTANCE OF 92.59' TO A POINT;
THENCE S 17°08'01" E A DISTANCE OF 30.00' TO A POINT ON THE NORTHERLY LINE OF SAID LEASE AREA; THENCE N 72°51'59" E ALONG SAID LEASE AREA A DISTANCE OF 65.03' TO A POINT WHICH IS THE POINT OF BEGINNING, HAVING AN AREA OF 57,066.357 SQUARE FEET, 1.310 ACRES

1-1-38.1
N/F
ROBERT MILES
9584 FARGO RD.
CORFU, NY 14036
DEED 861-778

10°55'
7935 WEST LONGITUDE
TRUE NORTH
MAGNETIC NORTH

MATCHLINE V103
MATCHLINE V102
GRAVEL DRIVE
FIELD
PROPOSED 30' WIDE ACCESS & UTILITY EASEMENT
50' FRONT SETBACK
S 01°13'51" E 478.78'
N 01°13'51" W 448.87'
12"CPP INV =873.37
12"CPP INV =872.81

LOCUS
1-1-37.2
AND
2-1-9.2
N/F
KENNETH FEITSHANS
9857 FARGO RD.
CORFU, NY 14036
DEED 449-564
AREA = 111.10 ACRES ±

CTC-1
12"CPP INV =878.34
NG 600 83 V2.11-1
NG 96 - 72
12"CPP INV =878.74
N 08°41'32" E 30.32'
WOODED
NM 610 83 CTC 1-1
PAVED DRIVE
PROPOSED 30' WIDE ACCESS & UTILITY EASEMENT
N 88°24'27" E 903.16'
NM 620 CTC 1-2
NM 6 NG 630-83 CTC 1-3
4 1/2" IRON PIPE
NM 640-83 CTC 1-1
S 88°24'27" W 937.34'
OPEN
12"CPP INV =877.79
12"CPP INV =877.19
GRAVEL DRIVE
BUILDING
BUILDING
BUILDING

1-1-37.1
N/F
WENDY SCHMITT
9669 FARGO RD.
CORFU, NY 14036
DEED 861-357

0 40' 80' 120'
SCALE: 1"=40'

1 EXISTING CONDITIONS

© 2016 by Lawson Surveying & Mapping, all rights reserved.

LSM LAWSON SURVEYING & MAPPING
Boundary ~ Topographic ~ Control ~ Deformation ~ Construction ~ G.I.S. ~ Subdivision ~ G.P.S.
16 ~ 18 Reynolds Avenue ◊ Oneonta, New York 13820
Phone: (607) 432-3000
Facsimile: (607) 432-5213
www.lawsonsurvey.com

AMERICAN TOWER®
ATC TOWER SERVICES
3500 REGENCY PARKWAY
SUITE 100
CARY, NC 27518
PHONE: (919) 468-0112

PYRAMID Network Services, LLC
6519 TOWPATH ROAD
EAST SYRACUSE, NY 13057
TEL: (315) 701-1300
FAX: (315) 445-0653

Hudson Design Engineering PLLC
29 HAMM ROAD TEL: (978) 557-5553
HUDSON, NY 12534 FAX: (978) 336-5584

REV.	DESCRIPTION	BY	DATE

ATC SITE NUMBER:
201958

ATC SITE NAME:
ATC - CORFU A

SITE ADDRESS:
9857 FARGO ROAD
DARIEN, NY 14036

SEAL:

LAND SURVEYOR
ROBERT JAMES LAWSON
090116
STATE OF NEW YORK

DRAWN BY:	JDJ
APPROVED BY:	RJL
DATE DRAWN:	11-4-2016
LSM JOB NO:	5634

EXISTING CONDITIONS

SHEET NUMBER:	REVISION:
V-102	0

Copyright © 2016 ATC IP LLC, All Rights Reserve

LEGEND

- PROPERTY LINE – SUBJECT PARCEL
- PROPERTY LINE – ABUTTERS
- PROPOSED EASEMENT LINE
- ZONING SETBACK LINE
- CONTOUR LINE
- WATER COURSE
- WETLANDS LINE
- WETLANDS FLAG
- UTILITY POLE
- OVERHEAD UTILITY LINES
- TREE LINE
- DECIDUOUS TREE

1-1-38.1
N/F
ROBERT MILES
9564 FARGO RD.
CORFU, NY 14036
DEED 861-778

LEASE AREA

A CERTAIN LEASE AREA LOCATED EAST OF FARGO ROAD IN THE TOWN OF DARIEN, COUNTY OF GENESEE, NEW YORK, CONTAINING 10,000.00 SQUARE FEET (0.230 ACRE) MORE OR LESS OF LAND, LOCATED WITHIN LAND OF THE GRANTORS DESCRIBED IN BOOK 449 PAGE 564, SAID PARCEL IS DESCRIBED AS FOLLOWS:
BEGINNING AT THE SOUTHWEST CORNER OF A LEASE AREA HEREIN DESCRIBED; SAID POINT BEING THE FOLLOWING TWO COURSES AND DISTANCES FROM A SOUTHWEST CORNER OF THE PARENT PARCEL:
N 01°16'29"W 607.58 FEET TO A POINT; THENCE;
N 88°43'31"E 234.42 FEET TO A POINT;
THENCE ALONG THE BOUNDS OF SAID LEASE AREA THE FOLLOWING FOUR (4) COURSES AND DISTANCES;
THENCE N 72°51'59" E A DISTANCE OF 100.00' TO A POINT;
THENCE S 17°08'01" W A DISTANCE OF 100.00' TO A POINT;
THENCE S 72°51'59" W A DISTANCE OF 100.00' TO A POINT;
THENCE N 17°08'01" E A DISTANCE OF 100.00' TO A POINT;
WHICH IS THE POINT OF BEGINNING,
HAVING AN AREA OF 10,000.000 SQUARE FEET, 0.230 ACRES

ACCESS AND UTILITY EASEMENT

A CERTAIN EASEMENT LOCATED EAST OF FARGO ROAD IN THE TOWN OF DARIEN, COUNTY OF GENESEE, NEW YORK, CONTAINING 57,066.357 SQUARE FEET (1.310 ACRES) MORE OR LESS OF LAND, LOCATED WITHIN LAND OF THE GRANTORS DESCRIBED IN BOOK 449 PAGE 564. SAID PARCEL IS DESCRIBED AS FOLLOWS:
BEGINNING AT THE NORTHWEST CORNER OF A LEASE AREA, RUNNING THENCE ALONG THE BOUNDS OF SAID ACCESS AND UTILITY EASEMENT
THE FOLLOWING FIFTEEN (15) COURSES AND DISTANCES;
S 72°51'59" E A DISTANCE OF 27.57' TO A POINT;
THENCE WITH A CURVE TO THE LEFT WITH AN ARC LENGTH OF 82.55', WITH A RADIUS OF 100.00', WITH A DELTA ANGLE OF 47°17'49", TO A POINT;
THENCE S 25°34'10" W A DISTANCE OF 165.87' TO A POINT;
THENCE WITH A CURVE TO THE LEFT WITH AN ARC LENGTH OF 156.70', WITH A RADIUS OF 335.00', WITH A DELTA ANGLE OF 26°48'01", TO A POINT;
THENCE S 01°13'51" E A DISTANCE OF 479.76' TO A POINT;
THENCE S 88°24'28" W A DISTANCE OF 937.3' TO A POINT;
THENCE N 0°6'41"E A DISTANCE OF 30.32' TO A POINT;
THENCE N 88°24'28" E A DISTANCE OF 903.16' TO A POINT;
THENCE N 01°13'51" W A DISTANCE OF 449.97' TO A POINT;
THENCE WITH A CURVE TO THE RIGHT WITH AN ARC LENGTH OF 170.73', WITH A RADIUS OF 365.00', WITH A DELTA ANGLE OF 26°48'01", TO A POINT;
THENCE N 25°34'10" E A DISTANCE OF 165.87' TO A POINT;
THENCE WITH A CURVE TO THE RIGHT WITH AN ARC LENGTH OF 107.31', WITH A RADIUS OF 130.00', WITH A DELTA ANGLE OF 47°17'49", TO A POINT;
THENCE N 72°51'59" E A DISTANCE OF 92.57' TO A POINT;
THENCE S 17°08'01" E A DISTANCE OF 20.00' TO A POINT ON THE NORTHERLY LINE OF SAID LEASE AREA; THENCE N 72°51'59" E ALONG SAID LEASE AREA A DISTANCE OF 65.00' TO A POINT WHICH IS THE POINT OF BEGINNING,
HAVING AN AREA OF 57,066.357 SQUARE FEET, 1.310 ACRES

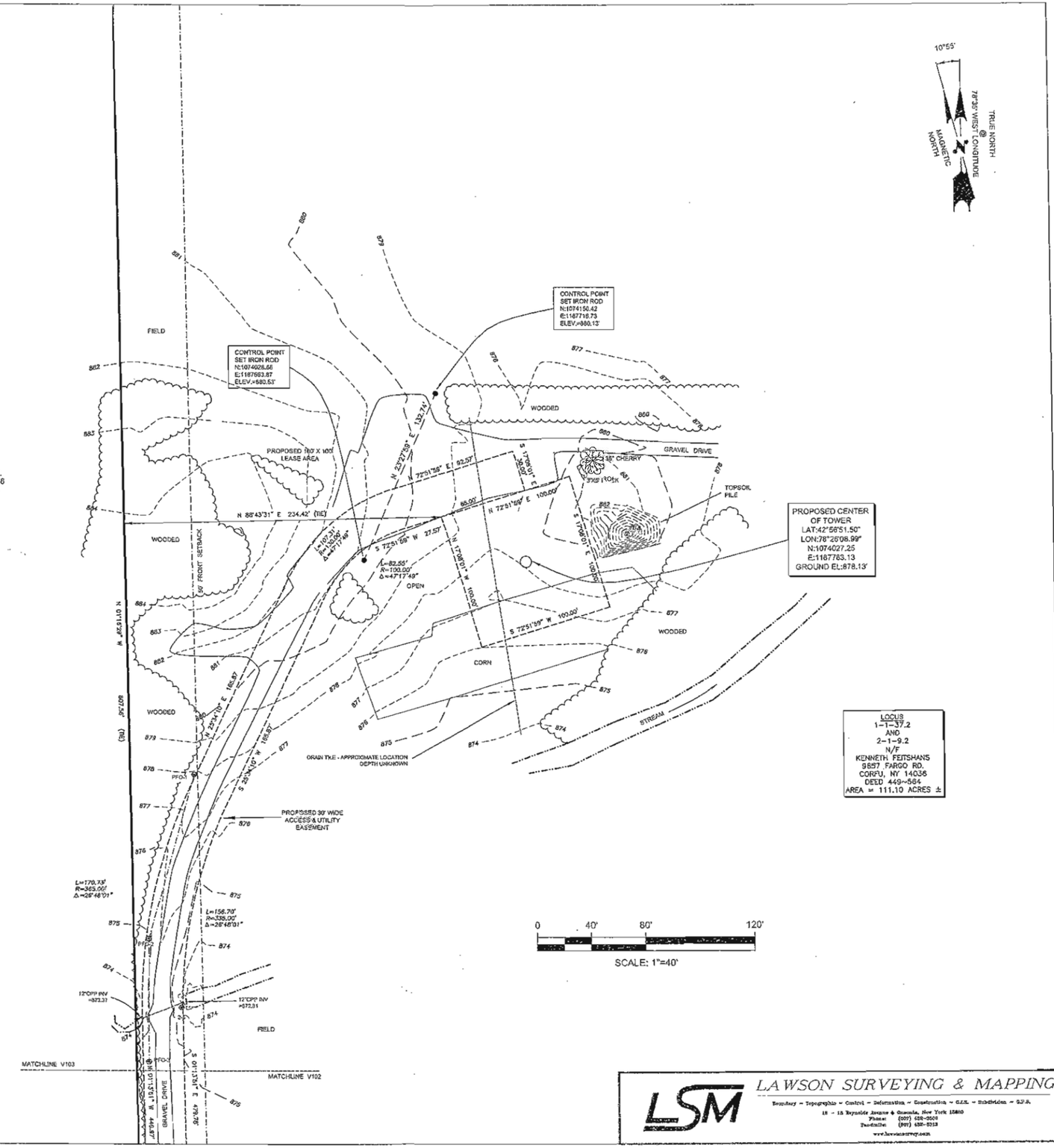

2 EXISTING CONDITIONS

© 2016 by Lawson Surveying & Mapping, all rights reserved.

Copyright © 2016 ATC IP LLC, All Rights Reserve

AMERICAN TOWER®
ATC TOWER SERVICES
3500 REGENCY PARKWAY
SUITE 100
CARY, NC 27518
PHONE: (919) 468-0112

PYRAMID Network Services, LLC
6519 TOWPATH ROAD
EAST SYRACUSE, NY 13057
TEL: (315) 701-1300
FAX: (315) 445-0653

Hudson Design Engineering PLLC
29 HAMM ROAD TEL: (978) 557-5553
HUDSON, NY 12534 FAX: (978) 336-5586

REV.	DESCRIPTION	BY	DATE

ATC SITE NUMBER:
201958

ATC SITE NAME:
ATC - CORFU A

SITE ADDRESS:
9657 FARGO ROAD
DARIEN, NY 14036

SEAL:

LAND SURVEYOR
ROBERT J. LAWSON
No. 049901
STATE OF NEW YORK

DRAWN BY:	JDJ
APPROVED BY:	RJL
DATE DRAWN:	11-4-2016
LSM JOB NO:	5634

EXISTING CONDITIONS

SHEET NUMBER:	REVISION:
V-103	0

LSM LAWSON SURVEYING & MAPPING
Boundary ~ Topographic ~ Control ~ Deformation ~ Construction ~ G.I.S. ~ Subdivision ~ S.P.A.
18 - 18 Reynolds Avenue ◆ Oneonta, New York 13820
Phone: (607) 432-0609
Facsimile: (607) 432-0913
www.lawsonsurvey.com

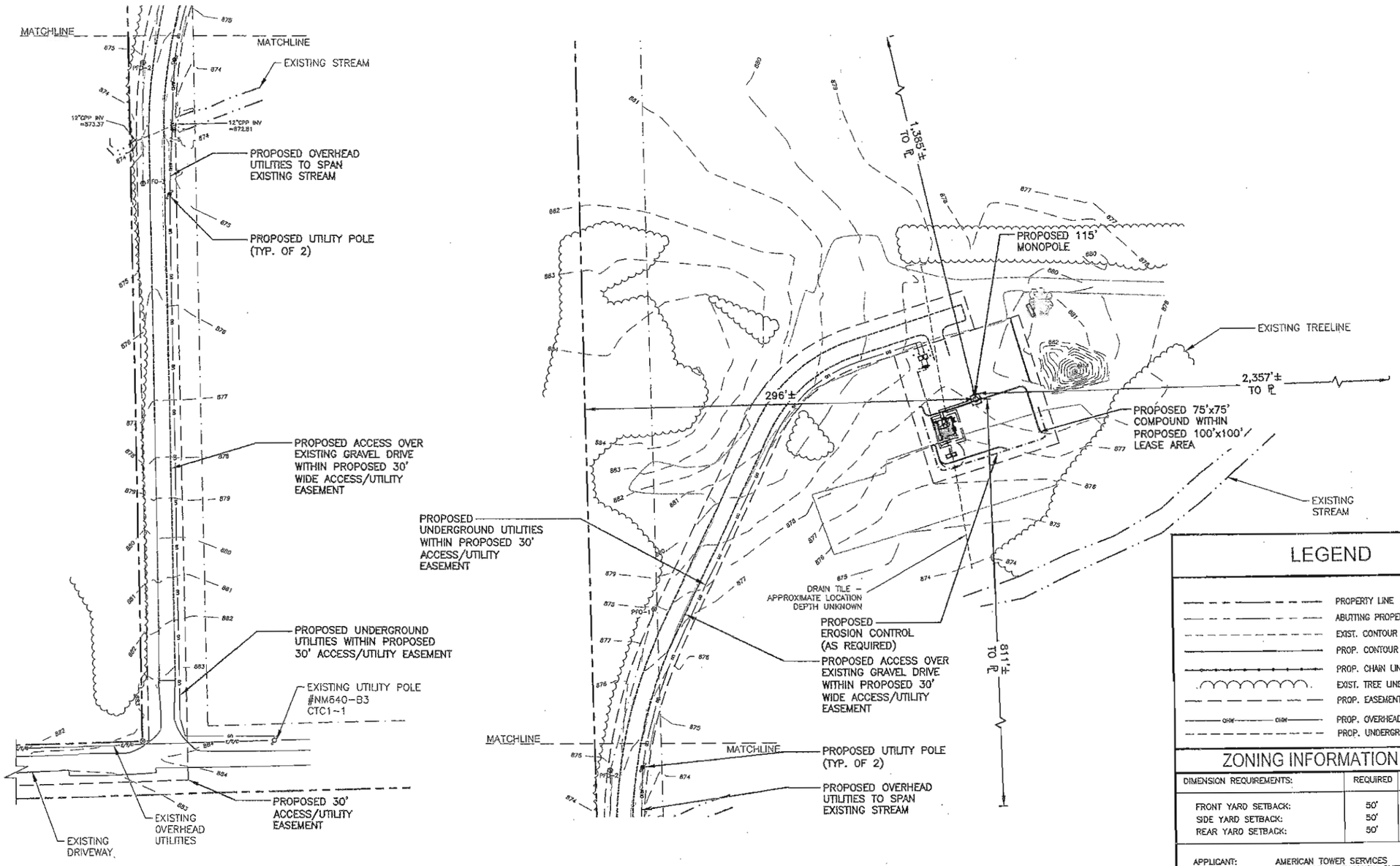

SITE PLAN (1 / C-1)
22x34 SCALE: 1"=40'
11x17 SCALE: 1"=80'

0 20 40 80 120

10°55'
MAGNETIC NORTH
TRUE NORTH

LEGEND

- PROPERTY LINE
- ABUTTING PROPERTY LINE
- EXIST. CONTOUR LINE
- PROP. CONTOUR LINE
- PROP. CHAIN LINK FENCE
- EXIST. TREE LINE
- PROP. EASEMENT
- OHU — OHU — PROP. OVERHEAD UTILITIES
- PROP. UNDERGROUND UTILITIES

ZONING INFORMATION

DIMENSION REQUIREMENTS:	REQUIRED	PROPOSED TOWER
FRONT YARD SETBACK:	50'	296'±
SIDE YARD SETBACK:	50'	1385'± & 811'±
REAR YARD SETBACK:	50'	2357'±

APPLICANT:	AMERICAN TOWER SERVICES 3500 REGENCY PARKWAY SUITE 100 CARY, NC 27518
OWNER:	KENNETH FEITSHANS 9657 FARGO ROAD CORFU, NY 14036
ZONING DISTRICT:	LOW DENSITY RESIDENTIAL (LDR)
JURISDICTION:	TOWN OF DARIEN
ASSESSOR'S ID:	1-1-37.2 AND 2-1-9.2

SOURCE:

PLAN TITLED: "EXISTING CONDITIONS"
DATED 8-XX-2016
PREPARED BY: LAWSON SURVEYING & MAPPING

AMERICAN TOWER CORPORATION
116 HUNTINGTON AVE. 11TH FLOOR
BOSTON, MA 02116

CELLCO PARTNERSHIP D.B.A.
verizon

Hudson Design Engineering PLLC
29 HAMM ROAD
HUDSON, NY 12534
TEL: (978) 557-5553
FAX: (978) 336-5586

STATE OF NEW YORK
DEREK J. CREASER
084307-A
LICENSED PROFESSIONAL ENGINEER

CHECKED BY: AT
APPROVED BY: DJC

SUBMITTALS

REV.	DATE	DESCRIPTION	BY
5	11/29/17	REVISED FOR PERMITTING	SB
4	09/31/17	REVISED FOR PERMITTING	SB
3	07/17/17	REVISED FOR PERMITTING	SB
2	06/20/17	REVISED FOR PERMITTING	SB
1	04/27/17	ISSUED FOR PERMITTING	EB
0	04/18/17	ISSUED FOR REVIEW	SB

ATC SITE NUMBER:
201958
SITE NAME:
CORFU

SITE ADDRESS:
9657 FARGO ROAD
DARIEN, NY 14036
GENESEE COUNTY

SHEET TITLE
SITE PLAN

SHEET NUMBER
C-1

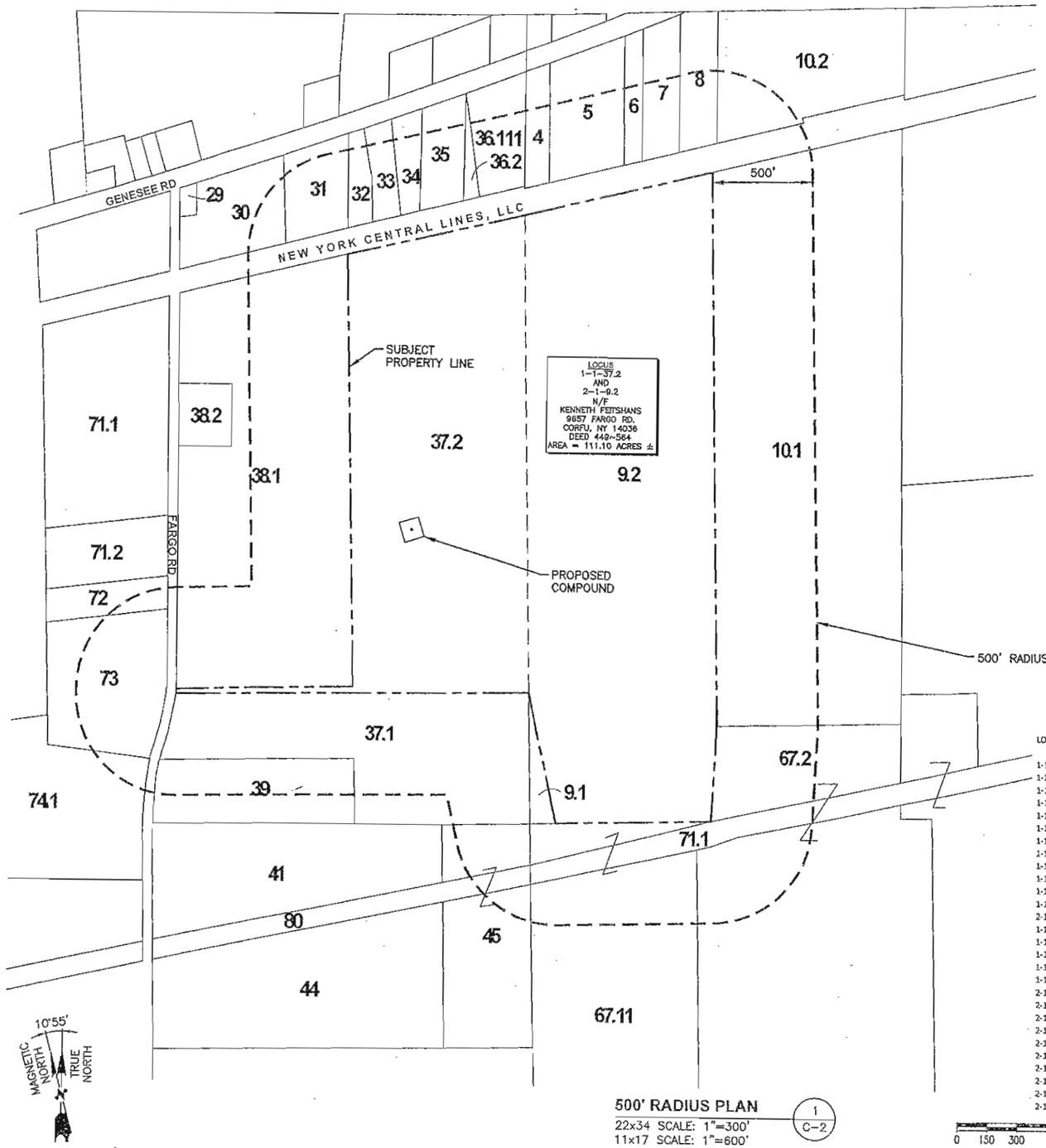

500' RADIUS PLAN
22x34 SCALE: 1"=300'
11x17 SCALE: 1"=600'
1 / C-2

0 150 300 600 900

500' ABUTTERS LIST

LOT	OWNER	PROPERTY ADDRESS	MAILING ADDRESS
1-1-30	DAVID W. WELLS	622 GENESEE ROAD CORFU, NY 14036	SAME
1-1-31	LUCAS J. HOFFARTH	636 GENESEE ROAD CORFU, NY 14036	SAME
1-1-32	PATRICK J. SONNENFELD	648 GENESEE ROAD CORFU, NY 14036	SAME
1-1-33	MARY ANN CORNELIUS	651 GENESEE ROAD CORFU, NY 14036	SAME
1-1-34	BERNARD & LINDA L. FIX	662 GENESEE ROAD CORFU, NY 14036	SAME
1-1-35	LEE A HARE	672 GENESEE ROAD CORFU, NY 14036	SAME
1-1-36.2	LEE A HARE	672 GENESEE ROAD CORFU, NY 14036	SAME
1-1-36.111	RICHARD D. & DIANE B. BURGER	678 GENESEE ROAD CORFU, NY 14036	SAME
1-1-72	CHRISTOPHER KOEPH	9632 FARGO ROAD	1561 BOWEN RD ELMA, NY 14059
1-1-73	ANTHONY D. MATUSZEWSKI	9640 FARGO ROAD DARIEN CENTER, NY 14036	SAME
1-1-74.1	CONNIE ZIMICKI	9694 FARGO ROAD CORFU, NY 14036	SAME
1-1-37.1	WENDY SCHMITT	9669 DARGO ROAD CORFU, NY 14036	SAME
2-1-9.1	WENDY SCHMITT	9669 DARGO ROAD CORFU, NY 14036	SAME
1-1-39	CINDY WILLIAMS	9677 FARGO ROAD CORFU, NY 14036	SAME
1-1-41	SANDRA MAURER	FARGO ROAD	618 SCRIBNER RD CORFU, NY 14036
1-1-45	WOODS EDGE FARMS, LLC	FARGO ROAD	714 REYNOLDS ROAD CORFU, NY 14036
1-1-38.1	ROBERT MILES	9564 FARGO ROAD CORFU, NY 14036	SAME
1-1-80	WOODS EDGE FARMS, LLC	FARGO ROAD	714 REYNOLDS ROAD CORFU, NY 14036
2-1-67.11	WOODS EDGE FARMS, LLC	714 REYNOLDS ROAD CORFU, NY 14036	SAME
2-1-71.1	WOODS EDGE FARMS, LLC	FARGO ROAD	714 REYNOLDS ROAD CORFU, NY 14036
2-1-67.2	WOODS EDGE FARMS, LLC	817 REYNOLDS RD	714 REYNOLDS ROAD CORFU, NY 14036
2-1-10.1	PAUL FEITSHANS	FARGO ROAD	9657 FARGO ROAD CORFU, NY 14036
2-1-4	DONALD & BONNIE SCHAD	GENESEE ROAD	12345 WESTWOOD RD ALDEN, NY 14004
2-1-5	DAVID R. ALVORD	GENESEE ROAD	8850 WORTENDYKE RD BATAVIA, NY 14020
2-1-6	STANLEY GLOWNY	GENESEE ROAD	48 ROLLING HILLS DR ORCHARD PARK, NY 14027
2-1-7	DOROTHY E. HANSON	726 W. GENESEE ROAD CORFU, NY 01436	SAME
2-1-8	FATIMA UMAR & ZAYABA UZAYR YASIN	GENESEE ROAD	19 LILLY RIDGE DR EAST AMHERST, NY 14051
2-1-10.2	MARK S. SZPARA	GENESEE ROAD	12317 NICE RD AKRON, NY 14001

AMERICAN TOWER CORPORATION
116 HUNTINGTON AVE. 11TH FLOOR
BOSTON, MA 02116

CELLCO PARTNERSHIP D.B.A.
verizon

Hudson Design Engineering PLLC
29 HAMM ROAD
HUDSON, NY 12534
TEL: (978) 557-5553
FAX: (978) 336-5986

STATE OF NEW YORK
DEREK J. CREASER
LICENSED PROFESSIONAL ENGINEER
094307-1

CHECKED BY: AT

APPROVED BY: DJC

SUBMITTALS

REV.	DATE	DESCRIPTION	BY
5	11/29/17	REVISED FOR PERMITTING	SB
4	08/31/17	REVISED FOR PERMITTING	SB
3	07/17/17	REVISED FOR PERMITTING	SB
2	06/20/17	REVISED FOR PERMITTING	SB
1	04/27/17	ISSUED FOR PERMITTING	EB
0	04/18/17	ISSUED FOR REVIEW	SB

ATC SITE NUMBER:
201958
SITE NAME:
CORFU

SITE ADDRESS:
9657 FARGO ROAD
DARIEN, NY 14036
GENESEE COUNTY

SHEET TITLE
500' RADIUS PLAN

SHEET NUMBER
C-2

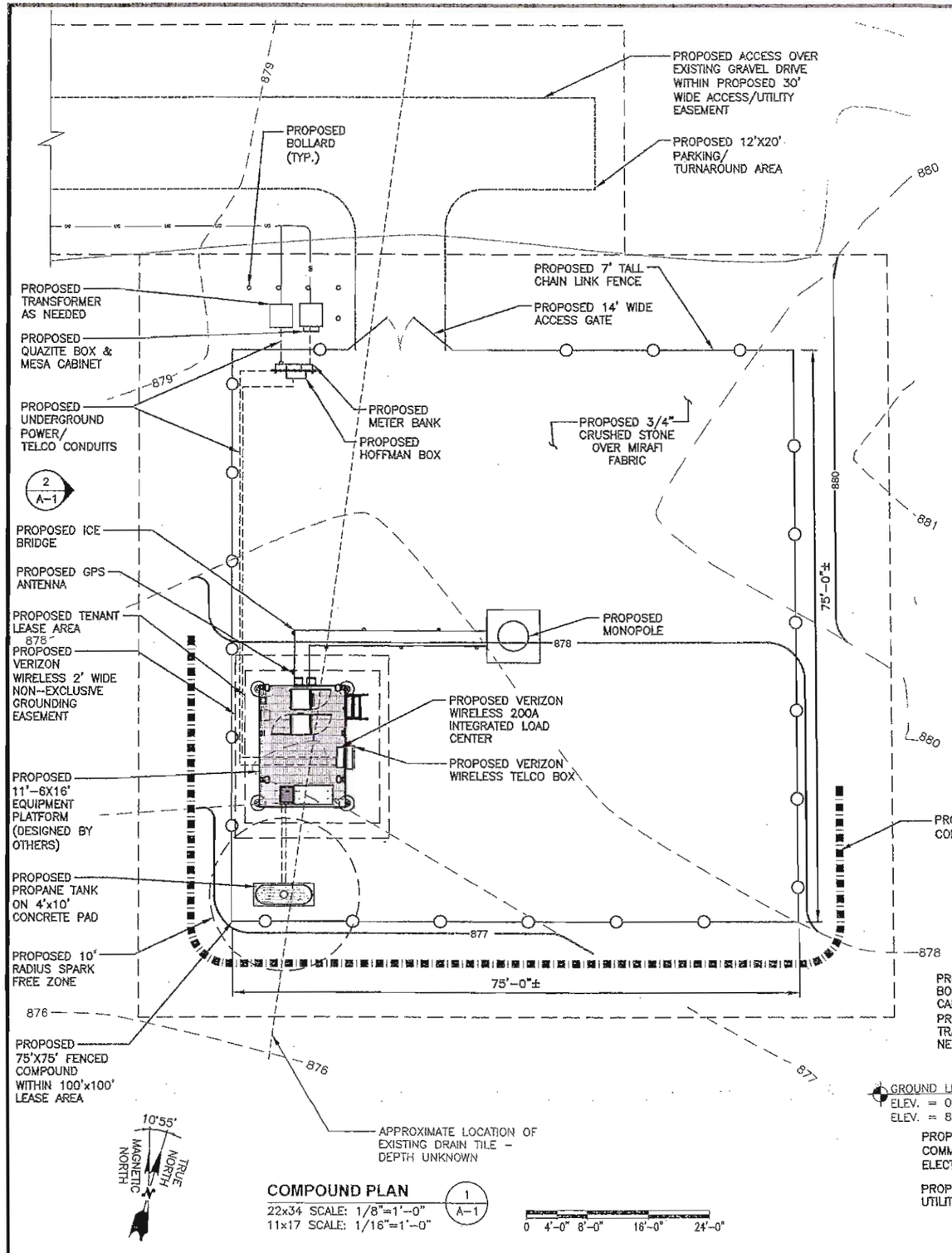

COMPOUND PLAN (1 / A-1)
22x34 SCALE: 1/8"=1'-0"
11x17 SCALE: 1/16"=1'-0"

0 4'-0" 8'-0" 16'-0" 24'-0"

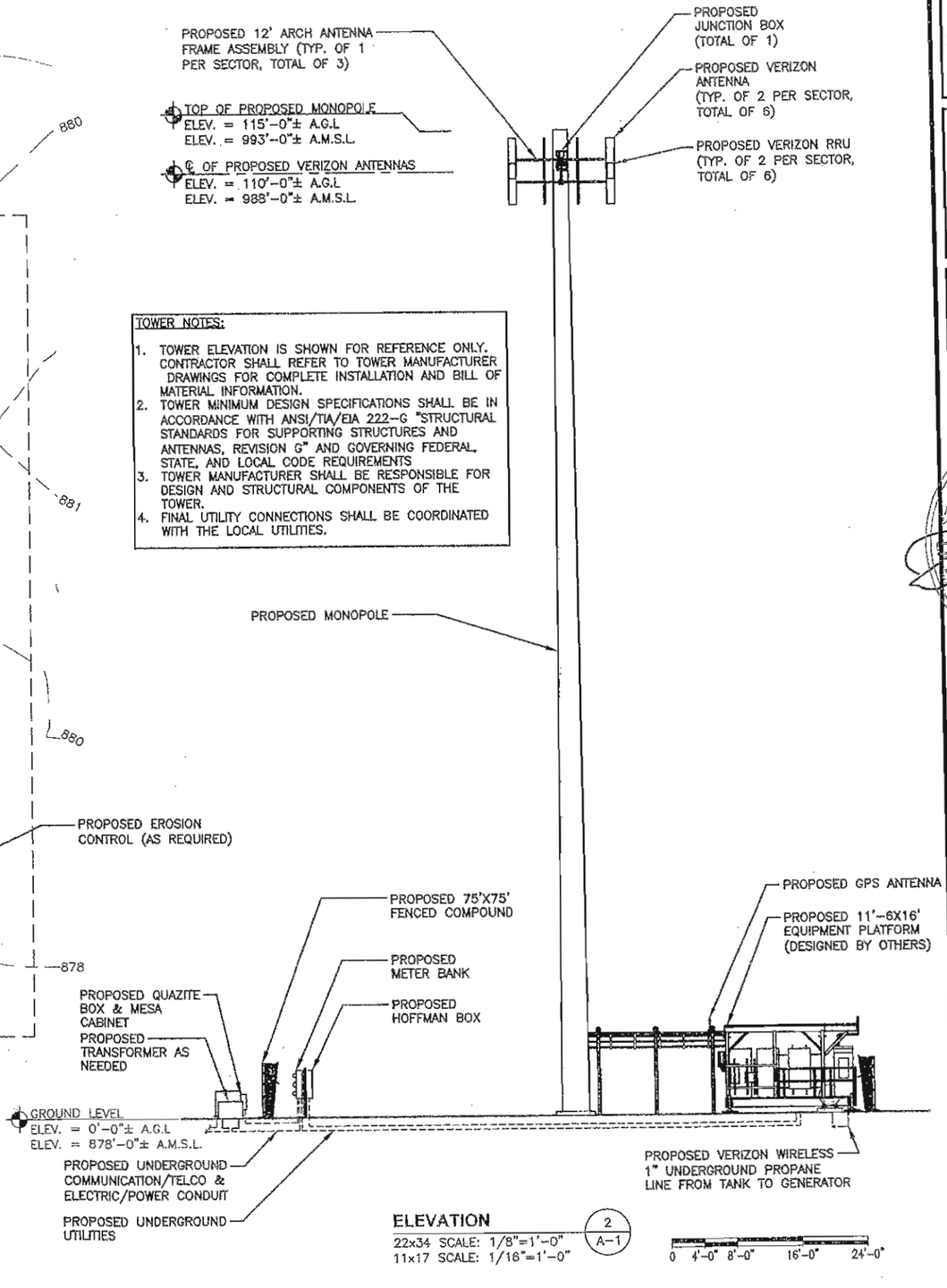

ELEVATION (2 / A-1)
22x34 SCALE: 1/8"=1'-0"
11x17 SCALE: 1/16"=1'-0"

0 4'-0" 8'-0" 16'-0" 24'-0"

TOWER NOTES:

1. TOWER ELEVATION IS SHOWN FOR REFERENCE ONLY. CONTRACTOR SHALL REFER TO TOWER MANUFACTURER DRAWINGS FOR COMPLETE INSTALLATION AND BILL OF MATERIAL INFORMATION.
2. TOWER MINIMUM DESIGN SPECIFICATIONS SHALL BE IN ACCORDANCE WITH ANSI/TIA/EIA 222-G "STRUCTURAL STANDARDS FOR SUPPORTING STRUCTURES AND ANTENNAS, REVISION G" AND GOVERNING FEDERAL, STATE, AND LOCAL CODE REQUIREMENTS
3. TOWER MANUFACTURER SHALL BE RESPONSIBLE FOR DESIGN AND STRUCTURAL COMPONENTS OF THE TOWER.
4. FINAL UTILITY CONNECTIONS SHALL BE COORDINATED WITH THE LOCAL UTILITIES.

AMERICAN TOWER CORPORATION
116 HUNTINGTON AVE. 11TH FLOOR
BOSTON, MA 02116

CELLCO PARTNERSHIP D.B.A.
verizon

Hudson Design Engineering PLLC
29 HAMM ROAD
HUDSON, NY 12534
TEL: (978) 557-5553
FAX: (978) 336-5586

STATE OF NEW YORK
DEREK J. CREASER
094307
LICENSED PROFESSIONAL ENGINEER

CHECKED BY: AT

APPROVED BY: DJC

SUBMITTALS

REV.	DATE	DESCRIPTION	BY
5	11/28/17	REVISED FOR PERMITTING	SB
4	08/31/17	REVISED FOR PERMITTING	SB
3	07/17/17	REVISED FOR PERMITTING	SB
2	06/20/17	REVISED FOR PERMITTING	SB
1	04/27/17	ISSUED FOR PERMITTING	EB
0	04/18/17	ISSUED FOR REVIEW	SB

ATC SITE NUMBER:
201958
SITE NAME:
CORFU

SITE ADDRESS:
9657 FARGO ROAD
DARIEN, NY 14036
GENESEE COUNTY

SHEET TITLE
COMPOUND PLAN & ELEVATION

SHEET NUMBER
A-1

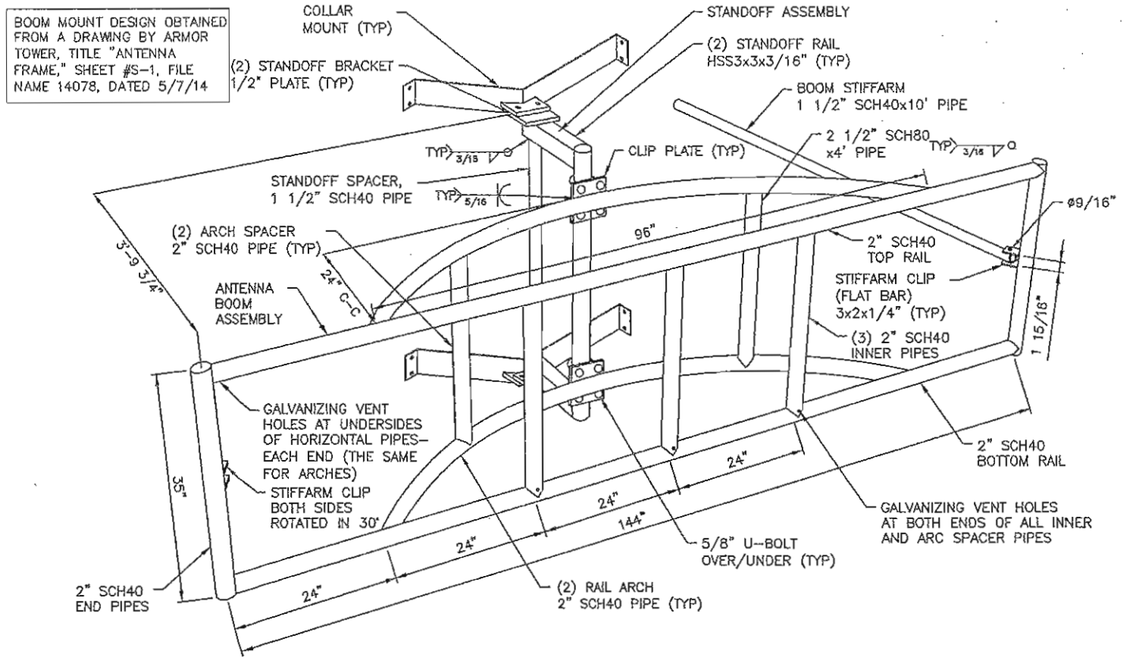

BOOM MOUNT DETAIL
SCALE: N.T.S
1 A-2

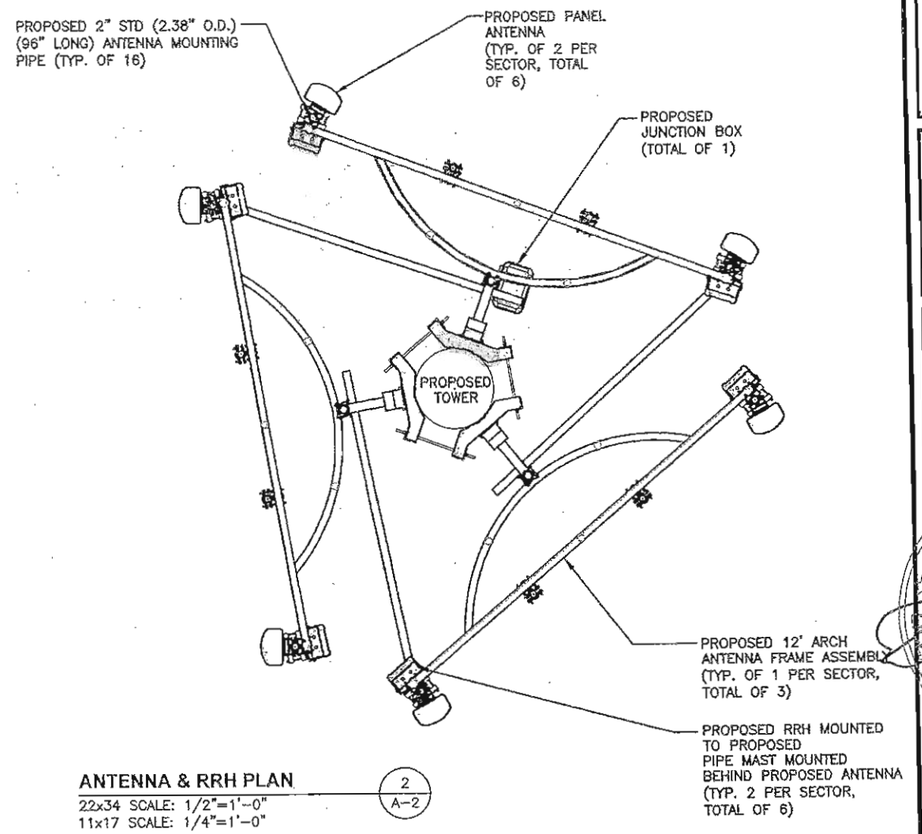

ANTENNA & RRH PLAN
22x34 SCALE: 1/2"=1'-0"
11x17 SCALE: 1/4"=1'-0"
2 A-2

0 16'-0" 32'-0" 64'-0" 96'-0"

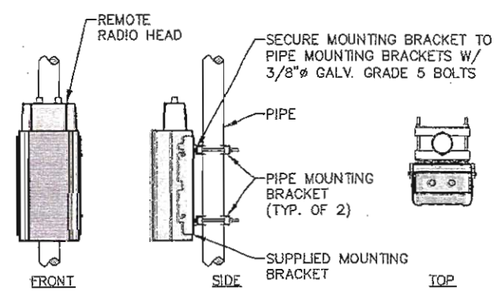

REMOTE RADIO HEAD
SCALE: N.T.S
3 A-2

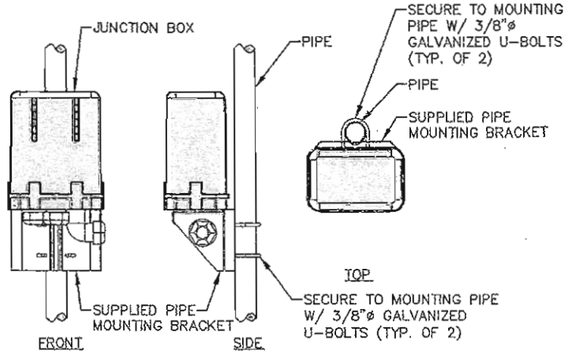

JUNCTION BOX
SCALE: N.T.S
4 A-2

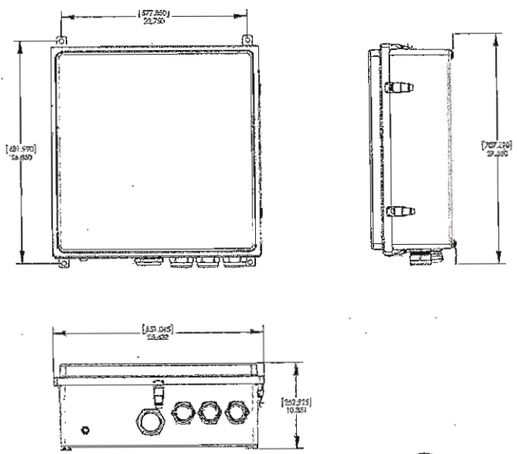

RAYCAP JUNCTION BOX
SCALE: N.T.S
5 A-2

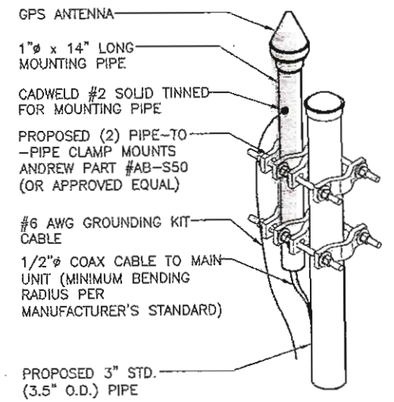

GPS ANTENNA MOUNTING DETAIL
SCALE: N.T.S
6 A-2

AMERICAN TOWER CORPORATION
116 HUNTINGTON AVE. 11TH FLOOR
BOSTON, MA 02116

CELLCO PARTNERSHIP D.B.A.
verizon

Hudson Design Engineering PLLC
29 HAMM ROAD
HUDSON, NY 12534
TEL: (978) 557-5553
FAX: (978) 336-5586

STATE OF NEW YORK
DEREK J. CREASER
084307-1
LICENSED PROFESSIONAL ENGINEER

CHECKED BY: AT
APPROVED BY: DJC

SUBMITTALS

REV.	DATE	DESCRIPTION	BY
5	11/29/17	REVISED FOR PERMITTING	SB
4	08/31/17	REVISED FOR PERMITTING	SB
3	07/17/17	REVISED FOR PERMITTING	SB
2	06/20/17	REVISED FOR PERMITTING	SB
1	04/27/17	ISSUED FOR PERMITTING	EB
0	04/18/17	ISSUED FOR REVIEW	SB

ATC SITE NUMBER:
201958
SITE NAME:
CORFU

SITE ADDRESS:
9657 FARGO ROAD
DARIEN, NY 14036
GENESEE COUNTY

SHEET TITLE
ANTENNA PLAN & DETAILS

SHEET NUMBER
A-2

FENCE NOTES

1. ALTERNATE FOOTINGS FOR ALL FENCE POSTS IN LEDGE: IF LEDGE IS ENCOUNTERED AT GRADE, OR AT A DEPTH SHALLOWER THAN 3'-6", CORE DRILL AN 8" DIA HOLE 18" INTO THE LEDGE. CENTER POST IN THE HOLE AND FILL WITH CONCRETE OR GROUT. IF LEDGE IS BELOW FINISH GRADE, COAT BACKFILLED SECTION OF POST WITH COAL TAR, AND BACKFILL WITH WELL-DRAINING GRAVEL.

2. ATTACH EACH GATE WITH 1-1/2 PAIR OF NON-LIFT-OFF TYPE, MALLEABLE IRON OR FORGING, PIN-TYPE HINGES. ASSEMBLIES SHALL ALLOW FOR 180° OF GATE TRAVEL.

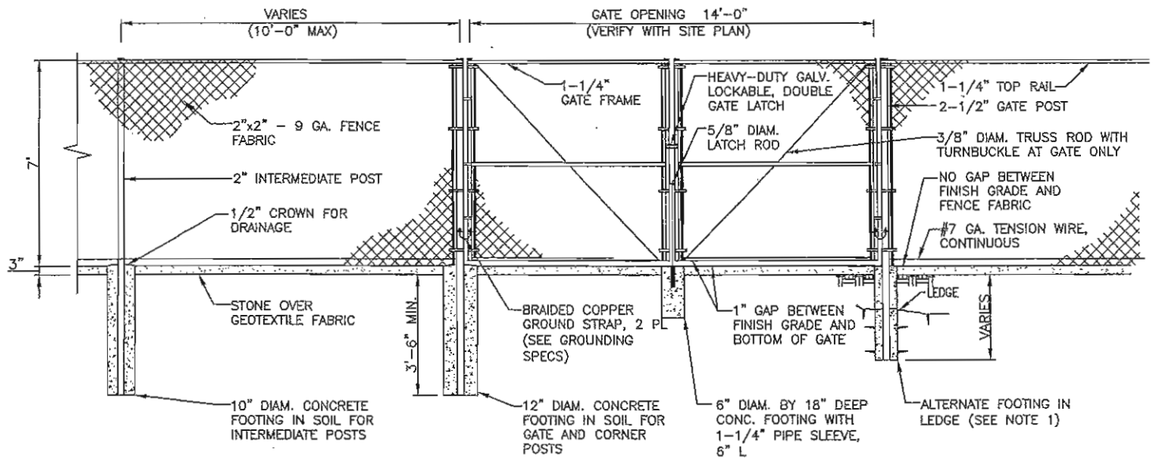

CHAIN LINK FENCE DETAIL 1 / A-3
SCALE: N.T.S

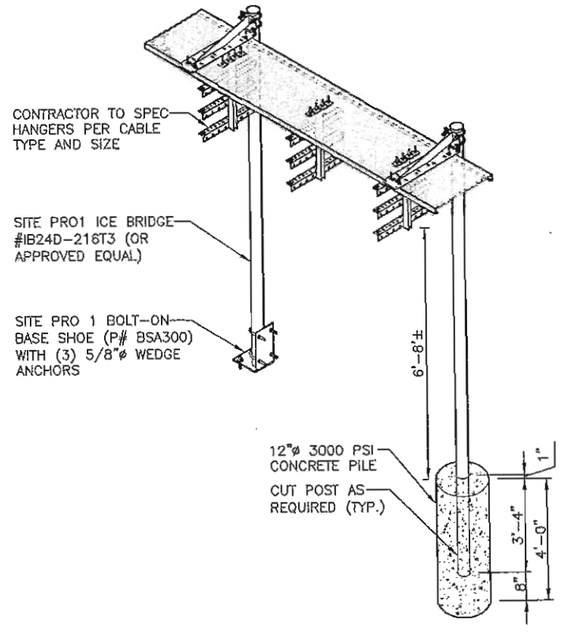

CABLE BRIDGE DETAIL 2 / A-3
22x34 SCALE: N.T.S

AMERICAN TOWER CORPORATION
116 HUNTINGTON AVE. 11TH FLOOR
BOSTON, MA 02116

CELLCO PARTNERSHIP D.B.A.
verizon

Hudson Design Engineering PLLC
29 HAMM ROAD
HUDSON, NY 12534
TEL: (978) 557-5553
FAX: (978) 336-5586

STATE OF NEW YORK
DEREK J. CREASER
D094307-1
LICENSED PROFESSIONAL ENGINEER

CHECKED BY: AT

APPROVED BY: DJC

SUBMITTALS

REV.	DATE	DESCRIPTION	BY
5	11/29/17	REVISED FOR PERMITTING	SB
4	08/31/17	REVISED FOR PERMITTING	SB
3	07/17/17	REVISED FOR PERMITTING	SB
2	06/20/17	REVISED FOR PERMITTING	SB
1	04/27/17	ISSUED FOR PERMITTING	EB
0	04/18/17	ISSUED FOR REVIEW	SB

ATC SITE NUMBER:
201958
SITE NAME:
CORFU

SITE ADDRESS:
9657 FARGO ROAD
DARIEN, NY 14036
GENESEE COUNTY

SHEET TITLE
EQUIPMENT DETAILS

SHEET NUMBER
A-3

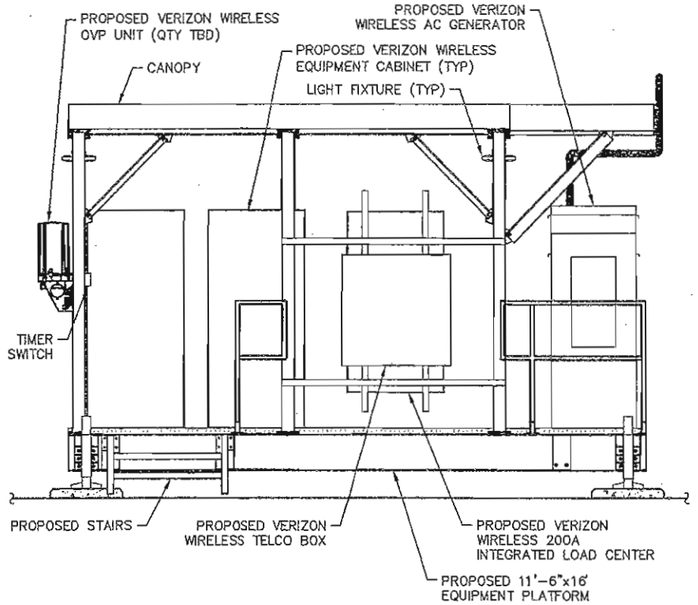

FRONT ELEVATION (1/A-4)
SCALE: N.T.S

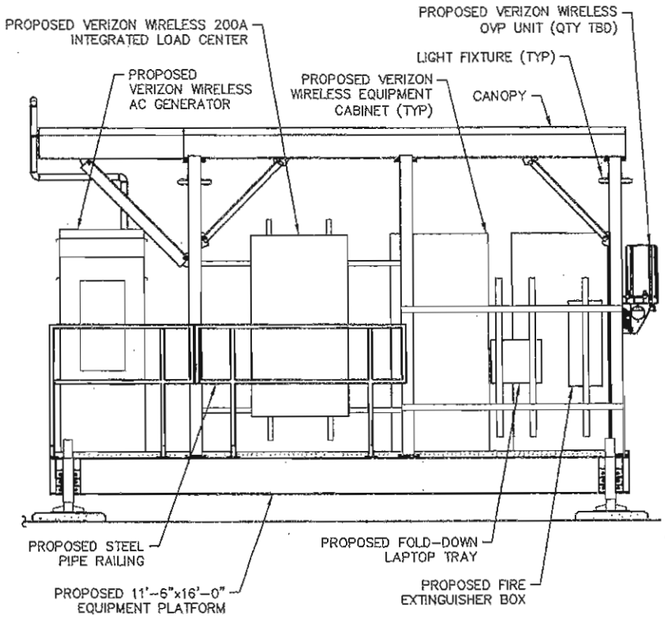

REAR ELEVATION (2/A-4)
SCALE: N.T.S

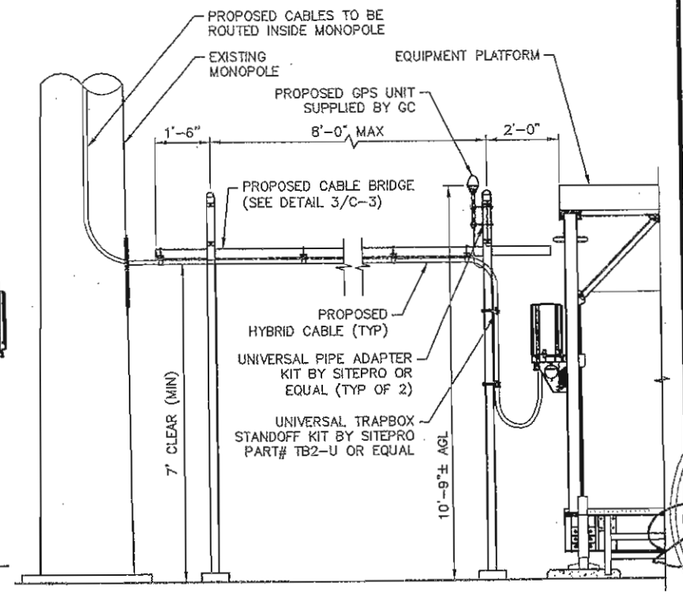

EQUIPMENT ELEVATION (3/A-4)
SCALE: N.T.S

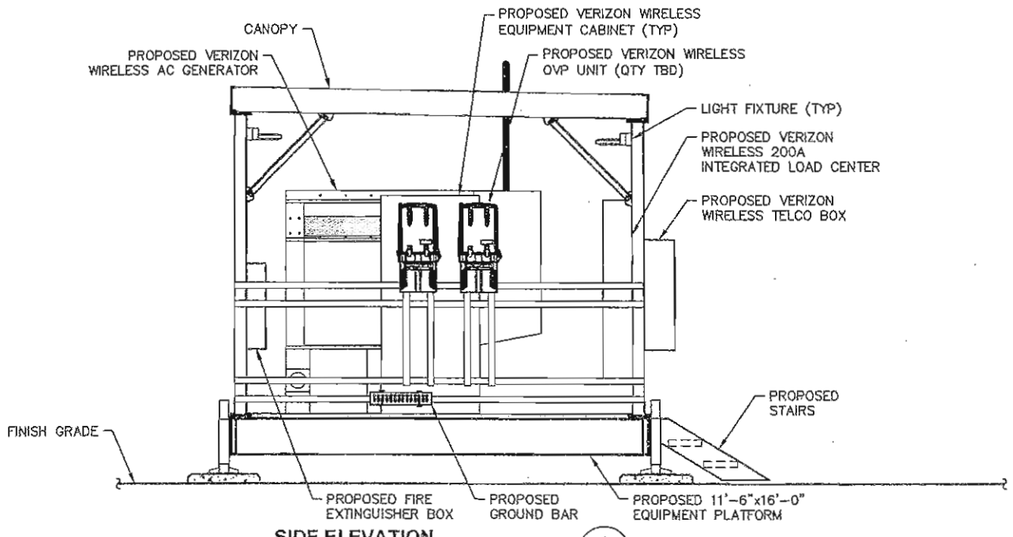

SIDE ELEVATION (4/A-4)
SCALE: N.T.S

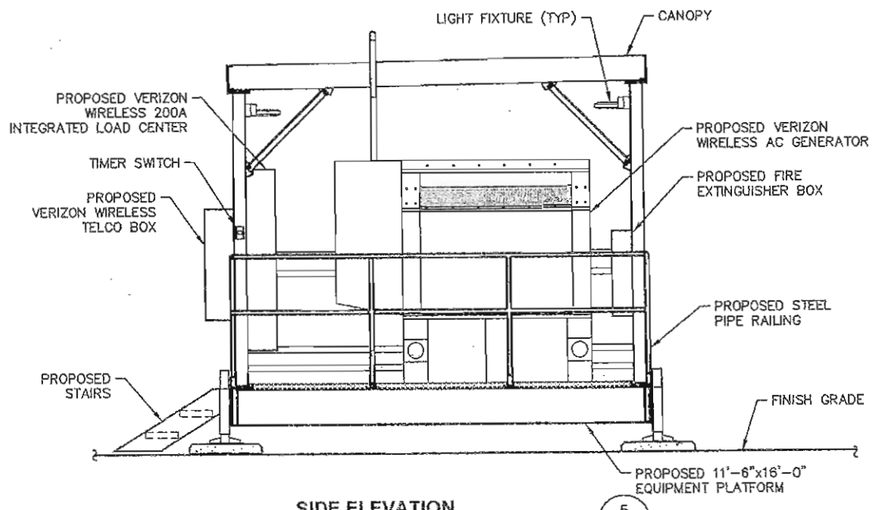

SIDE ELEVATION (5/A-4)
SCALE: N.T.S

AMERICAN TOWER CORPORATION
116 HUNTINGTON AVE. 11TH FLOOR
BOSTON, MA 02116

CELLCO PARTNERSHIP D.B.A.
verizon

Hudson Design Engineering LLC
29 HAMM ROAD
HUDSON, NY 12534
TEL: (978) 557-5553
FAX: (978) 336-5586

STATE OF NEW YORK
DEREK J. CREASER
D96307-1
LICENSED PROFESSIONAL ENGINEER

CHECKED BY: AT

APPROVED BY: DJC

SUBMITTALS

REV.	DATE	DESCRIPTION	BY
5	11/29/17	REVISED FOR PERMITTING	SB
4	09/31/17	REVISED FOR PERMITTING	SB
3	07/17/17	REVISED FOR PERMITTING	SB
2	06/20/17	REVISED FOR PERMITTING	SB
1	04/27/17	ISSUED FOR PERMITTING	EB
0	04/18/17	ISSUED FOR REVIEW	SB

ATC SITE NUMBER:
201958
SITE NAME:
CORFU

SITE ADDRESS:
9657 FARGO ROAD
DARIEN, NY 14036
GENESEE COUNTY

SHEET TITLE
PLATFORM & EQUIPMENT DETAILS

SHEET NUMBER
A-4

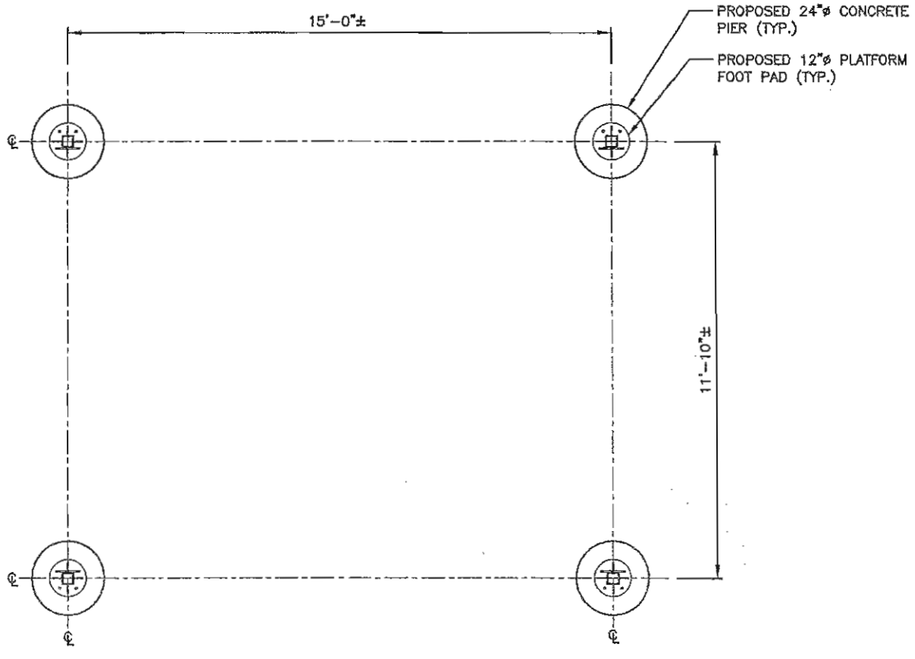

CONCRETE PIER LAYOUT PLAN (1 / A-5)
SCALE: N.T.S

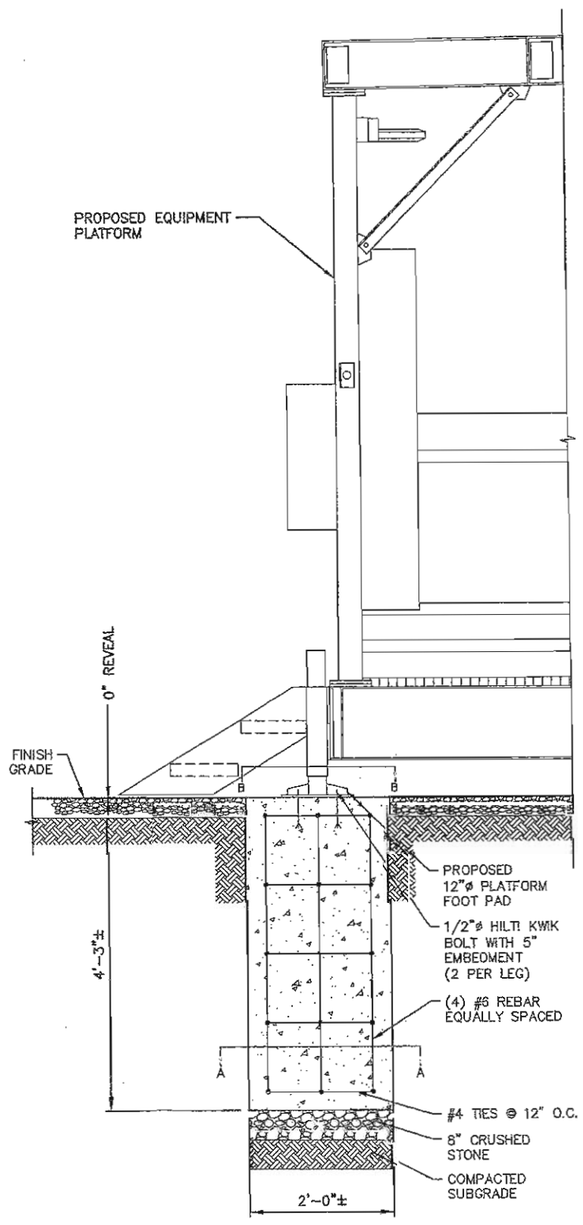

CONCRETE PIER DETAIL (2 / A-5)
SCALE: N.T.S

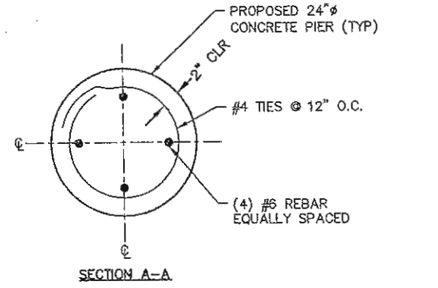

SECTION A-A

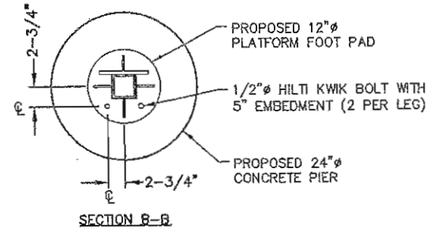

SECTION B-B

AMERICAN TOWER CORPORATION
116 HUNTINGTON AVE. 11TH FLOOR
BOSTON, MA 02116

CELLCO PARTNERSHIP D.B.A.
verizon

Hudson Design Engineering PLLC
29 HAMM ROAD
HUDSON, NY 12534
TEL: (978) 557-5553
FAX: (978) 336-5586

STATE OF NEW YORK
JEREK J. CREASER
084307
LICENSED PROFESSIONAL ENGINEER

CHECKED BY: AT

APPROVED BY: DJC

SUBMITTALS

REV.	DATE	DESCRIPTION	BY
5	11/29/17	REVISED FOR PERMITTING	SB
4	08/31/17	REVISED FOR PERMITTING	SB
3	07/17/17	REVISED FOR PERMITTING	SB
2	06/20/17	REVISED FOR PERMITTING	SB
1	04/27/17	ISSUED FOR PERMITTING	EB
0	04/18/17	ISSUED FOR REVIEW	SB

ATC SITE NUMBER:
201958
SITE NAME:
CORFU

SITE ADDRESS:
9657 FARGO ROAD
DARIEN, NY 14036
GENESEE COUNTY

SHEET TITLE
PLATFORM FOUNDATION DETAILS

SHEET NUMBER
A-5

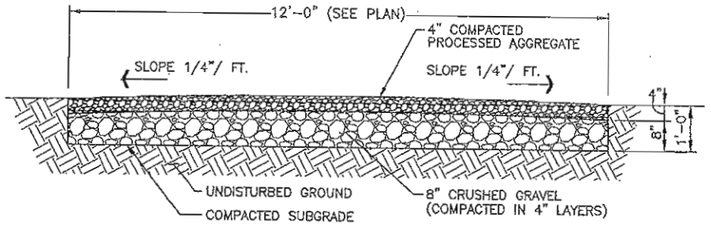

GRAVEL ACCESS DRIVE (1 / A-6)
SCALE: N.T.S

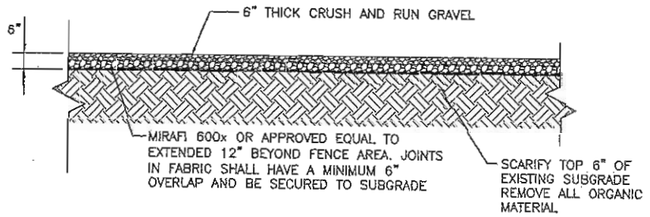

GRAVEL COMPOUND DETAIL (2 / A-6)
SCALE: N.T.S

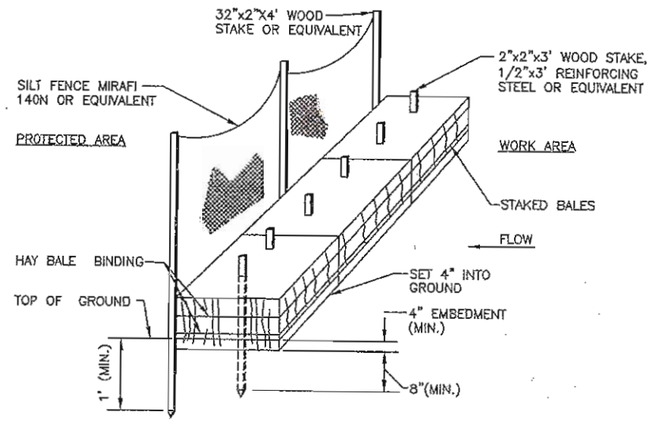

EROSION CONTROL DETAIL (3 / A-6)
SCALE: N.T.S

GENERAL CONSTRUCTION SEQUENCE:

THIS IS A GENERAL CONSTRUCTION SEQUENCE OUTLINE SOME ITEMS OF WHICH MAY NOT APPLY TO PARTICULAR SITES.

1) CLEAR AND GRUB AREAS OF PROPOSED CONSTRUCTION.
2) INSTALL TEMPORARY SEDIMENT AND EROSION CONTROL MEASURES AS REQUIRED.
3) REMOVE AND STOCKPILE TOPSOIL. STOCKPILE SHALL BE SEEDED TO PREVENT EROSION.
4) CONSTRUCT CLOSED DRAINAGE SWALES. PROTECT OUTLETS WITH SEDIMENTATION BARRIERS.
5) CONSTRUCT ROADWAYS AND PERFORM SITE GRADING, PLACING HAY BALES AND SILTATION FENCES AS REQUIRED TO CONTROL SOIL EROSION.
6) BEGIN TEMPORARY AND PERMANENT SEEDING AND MULCHING. ALL CUT AND FILL SLOPES SHALL BE SEEDED OR MULCHED IMMEDIATELY AFTER THEIR CONSTRUCTION. NO AREA SHALL BE LEFT UNSTABILIZED FOR A TIME PERIOD OF MORE THAN 15 DAYS.
7) DAILY, OR AS REQUIRED, CONSTRUCT, INSPECT, AND IF NECESSARY, RECONSTRUCT TEMPORARY BERMS, DRAINS, DITCHES, SILT FENCES AND SEDIMENT TRAPS INCLUDING MULCHING AND SEEDING.
8) BEGIN EXCAVATION FOR AND CONSTRUCTION OF TOWERS AND PLATFORMS.
9) COMPLETE PERMANENT SEEDING AND LANDSCAPING.
10) NO STORM WATER FLOW SHALL BE DIVERTED TO ANY WETLANDS.
11) AFTER GRASS HAS BEEN FULLY GERMINATED IN ALL SEEDED AREAS, REMOVE ALL TEMPORARY EROSION CONTROL MEASURES.

EROSION CONTROL MEASURES:

1) DISTURBED AREAS SHALL BE KEPT TO THE MINIMUM AREA NECCESSARY TO CONSTRUCT THE ROADWAYS AND ASSOCIATED DRAINAGE FACILITIES.
2) HAY BALE BARRIERS AND SEDIMENT TRAPS SHALL BE INSTALLED AS REQUIRED. BARRIERS AND TRAPS ARE TO BE MAINTAINED AND CLEANED UNTIL ALL SLOPES HAVE A HEALTHY STAND OF GRASS.
3) BALED HAY AND MULCH SHALL BE MOWINGS OF ACCEPTABLE HERBACEOUS GROWTH, FREE FROM NOXIOUS WEEDS OR WOODY STEMS, AND SHALL BE DRY. NO SALT HAY SHALL BE USED.
4) FILL MATERIAL SHALL BE FREE FROM STUMPS, WOOD, ROOTS, ETC.
5) STOCKPILED MATERIALS SHALL BE PLACED ONLY IN AREAS SHOWN ON THE PLANS. STOCKPILES SHALL BE PROTECTED BY SILTATION FENCE AND SEEDED TO PREVENT EROSION. THESE MEASURES SHALL REMAIN UNTIL ALL MATERIAL HAS BEEN PLACED OR DISPOSED OFF SITE.
6) ALL DISTURBED AREAS SHALL BE LOAMED AND SEEDED. A MINIMUM OF 4 INCHES OF LOAM SHALL BE INSTALLED WITH NOT LESS THAN ONE POUND OF SEED PER 50 SQUARE YARDS OF AREA.
7) APPLICATION OF GRASS SEED, FERTILIZERS AND MULCH SHALL BE ACCOMPLISHED BY BROADCAST SEEDING OR HYDROSEEDING AT THE RATES OUTLINED BELOW:

LIMESTONE:75-100 LBS./1,000 SQUARE FEET.
FERTILIZER:RATE RECOMMENDED BY MANUFACTURER.
MULCH: HAY MULCH APPROXIMATELY 3 TONS/ACRE UNLESS EROSION CONTROL MATTING IS USED.

SEED MIX (SLOPES LESS THAN 4:1)	LBS./ACRE
CREEPING RED FESCUE	20
TALL FESCUE	20
REDTOP	2
	42

SLOPE MIX (SLOPES GREATER THAN 4:1)	LBS./ACRE
CREEPING RED FESCUE	20
TALL FESCUE	20
BIRDSFOOT TREEFOIL	8
	48

TREATMENT SWALE PLANTING SPECIFICATIONS

TALL FESCUE	20 LBS/ACRE	OR	0.45 LBS/10,000 SF
CREEPING RED FESCUE	20 LBS/ACRE	OR	0.45 LBS/10,000 SF
BIRDSFOOT TREFOIL	8 LBS/ACRE	OR	0.20 LBS/10,000 SF

LIME AND FERTILIZER SHOULD BE APPLIED PRIOR TO OR AT TIME OF SEEDING AND INCORPORATED INTO THE SOIL. THE FOLLOWING RATES ARE RECOMMENDED:

AGRICULTURAL LIMESTONE	2 TONS/ACRE	OR	100 LBS/1,000 SF
NITROGEN (N)	50 LBS/ACRE	OR	1.1 LBS/10,000 SF
PHOSPHATE (P205)	100 LBS/ACRE	OR	2.2 LBS/10,000 SF
POTASH (K20)	100 LBS/ACRE	OR	2.2 LBS/10,000 SF

(THIS IS EQUIVALENT TO 500 LBS/ACRE OF 10-20-20 FERTILIZER OR 1,000 LBS/ACRE OF 5-10-10).

8) AFTER ALL DISTURBED AREAS HAVE BEEN STABILIZED THE TEMPORARY EROSION CONTROL MEASURES ARE TO BE REMOVED.
9) PAVED ROADWAYS MUST BE KEPT CLEAN AT ALL TIMES.
10) ALL CATCH BASIN INLETS WILL BE PROTECTED WITH LOW POINT SEDIMENTATION BARRIER.
11) ALL STORM DRAINAGE OUTLETS WILL BE STABILIZE AND CLEANED AS REQUIRED, BEFORE THE DISCHARGE POINTS BECOME OPERATIONAL.
12) ALL DEWATERING OPERATIONS MUST DISCHARGE DIRECTLY INTO A SEDIMENT FILTER AREA.
13) NO DISCHARGE SHALL BE DIRECTED TOWARDS ANY PROPOSED DITCHES, SWALES, OR PONDS UNTIL THEY HAVE BEEN PROPERLY STABILIZED.

AMERICAN TOWER CORPORATION
116 HUNTINGTON AVE. 11TH FLOOR
BOSTON, MA 02116

CELLCO PARTNERSHIP D.B.A.
verizon

Hudson Design Engineering PLLC
29 HAMA ROAD
HUDSON, NY 12534
TEL: (978) 557-5553
FAX: (978) 336-5586

STATE OF NEW YORK
DEREK J. CREASER
094307
LICENSED PROFESSIONAL ENGINEER

CHECKED BY: AT

APPROVED BY: DJC

SUBMITTALS

REV.	DATE	DESCRIPTION	BY
5	11/29/17	REVISED FOR PERMITTING	SB
4	08/31/17	REVISED FOR PERMITTING	SB
3	07/17/17	REVISED FOR PERMITTING	SB
2	06/20/17	REVISED FOR PERMITTING	SB
1	04/27/17	ISSUED FOR PERMITTING	EB
0	04/18/17	ISSUED FOR REVIEW	SB

ATC SITE NUMBER:
201958
SITE NAME:
CORFU

SITE ADDRESS:
9657 FARGO ROAD
DARIEN, NY 14036
GENESEE COUNTY

SHEET TITLE
EROSION CONTROL NOTES & DETAILS

SHEET NUMBER
A-6

ELECTRICAL NOTES

1. ALL ELECTRICAL WORK SHALL CONFORM TO THE REQUIREMENTS OF THE NATIONAL ELECTRICAL CODE (NEC) AS WELL AS APPLICABLE STATE AND LOCAL CODES.
2. ALL ELECTRICAL ITEMS SHALL BE U.L. APPROVED OR LISTED AND PROCURED PER SPECIFICATION REQUIREMENTS.
3. THE ELECTRICAL WORK INCLUDES ALL LABOR AND MATERIAL DESCRIBED BY DRAWINGS AND SPECIFICATION INCLUDING INCIDENTAL WORK TO PROVIDE COMPLETE OPERATING AND APPROVED ELECTRICAL SYSTEM.
4. GENERAL CONTRACTOR SHALL PAY FEES FOR PERMITS, AND IS RESPONSIBLE FOR OBTAINING SAID PERMITS AND COORDINATION OF INSPECTIONS.
5. ELECTRICAL AND TELCO WIRING EXPOSED TO WEATHER SHALL BE IN WATER TIGHT GALVANIZED RIGID STEEL CONDUITS OR SCHEDULE 80 PVC (AS PERMITTED BY CODE) AND WHERE REQUIRED IN LIQUID TIGHT FLEXIBLE METAL OR NONMETALLIC CONDUITS.
6. RIGID STEEL CONDUITS SHALL BE GROUNDED AT BOTH ENDS.
7. ELECTRICAL WIRING SHALL BE COPPER WITH TYPE XHHW, THWN, OR THIN INSULATION.
8. RUN ELECTRICAL CONDUIT OR CABLE BETWEEN ELECTRICAL METER BANK AND PROPOSED CELL SITE POWER PEDESTAL AS INDICATED ON THIS DRAWING. PROVIDE FULL LENGTH PULL ROPE. COORDINATE INSTALLATION WITH UTILITY COMPANY.
9. RUN TELCO CONDUIT OR CABLE BETWEEN TELEPHONE UTILITY DEMARCATION POINT AND PROPOSED CELL SITE TELCO CABINET AND BTS CABINET AS INDICATED ON DRAWING A-3. PROVIDE FULL LENGTH PULL ROPE IN INSTALLED TELCO CONDUIT. PROVIDE GREENLEE CONDUIT MEASURING TAPE AT EACH END.
10. ALL EQUIPMENT LOCATED OUTSIDE SHALL HAVE NEMA 3R ENCLOSURE.

LEGEND

A	AMPERE
V	VOLT
KWH	KILOWATT – HOUR
C	CONDUIT
GRC	GALVANIZED RIGID CONDUIT
BGR	BURIED GROUND RING
BTCW	BARE TINNED SOLID COPPER WIRE
G	GROUND
⏚	GROUND
MGB	MASTER GROUND BAR
	O MECHANICAL CONNECTION
	● CADWELD CONNECTION
EGB	EQUIPMENT GROUND BAR
----G----	GROUND COPPER WIRE, SIZE AS NOTED
———	EXPOSED WIRING
———	#6G AWG INSULATED STRANDED
———	COAXIAL CABLE/HYBRID CABLE
⊙	5/8"x8' COPPER CLAD STAINLESS STEEL GROUND ROD
⊛	GROUND ROD WITH TEST WELL
-⊖-⊖-	● EXOTHERMIC (CAD WELD) OR
	O MECHANICAL (COMPRESSION TYPE) CONNECTION
PPC	POWER PROTECTION CABINET
⊠	OMNI-DIRECTIONAL ELECTRONIC MARKER SYSTEM (EMS) BALL

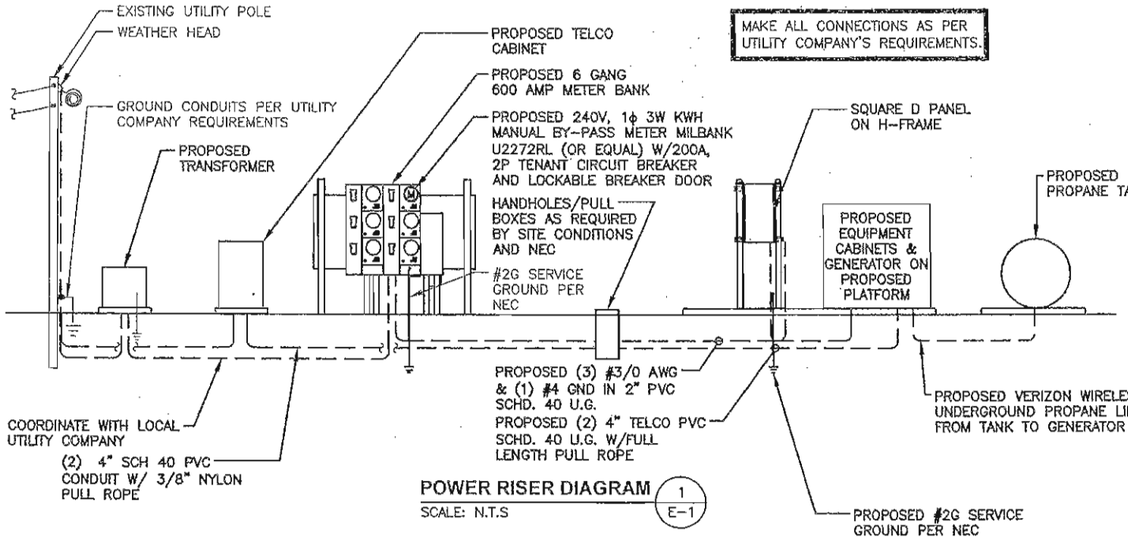

POWER RISER DIAGRAM (1 / E-1)
SCALE: N.T.S

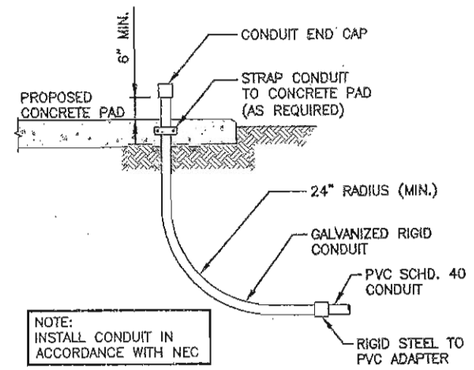

CONDUIT SWEEP DETAIL (2 / E-1)
SCALE: N.T.S

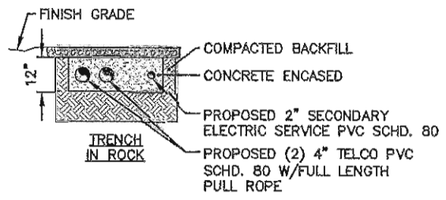

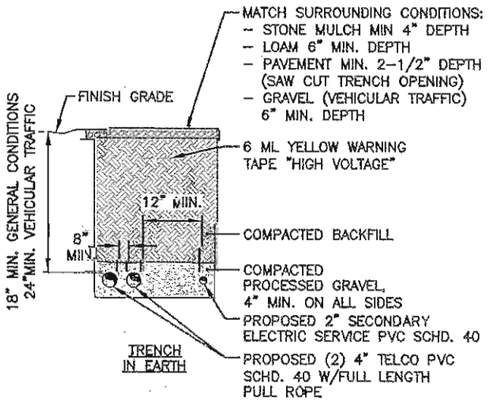

BURIED CONDUIT DETAIL (3 / E-1)
SCALE: N.T.S

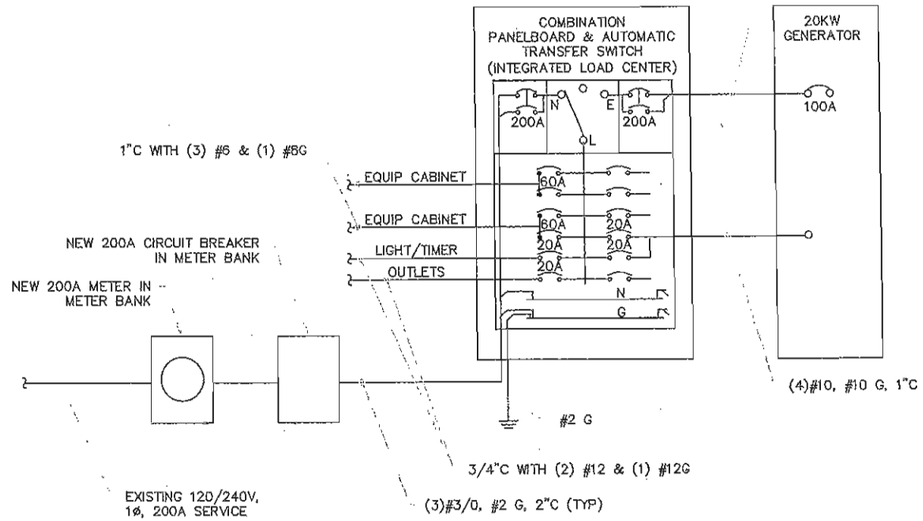

(3)#4, #8 G, 1-1/4"C (TYP)

NOTES:

1. EMT CONDUIT W/COMPRESSION FITTINGS SHALL BE USED ABOVE GRADE.
2. SCH 40 PVC CONDUIT SHALL BE USED BELOW GRADE.
3. SCH 80 PVC CONDUIT SHALL BE USED UNDER ROADWAY.

SINGLE LINE DIAGRAM (4 / E-1)
SCALE: N.T.S

AMERICAN TOWER CORPORATION
116 HUNTINGTON AVE. 11TH FLOOR
BOSTON, MA 02116

CELLCO PARTNERSHIP D.B.A.
verizon

Hudson Design Engineering
29 HALMA ROAD
HUDSON, NY 12534
TEL: (978) 557-5553
FAX: (978) 336-5586

STATE OF NEW YORK
DEREK J. CREAGER
109490?-1
LICENSED PROFESSIONAL ENGINEER

CHECKED BY: AT

APPROVED BY: DJC

SUBMITTALS

REV.	DATE	DESCRIPTION	BY
5	11/29/17	REVISED FOR PERMITTING	SB
4	08/31/17	REVISED FOR PERMITTING	SB
3	07/17/17	REVISED FOR PERMITTING	SB
2	06/20/17	REVISED FOR PERMITTING	SB
1	04/27/17	ISSUED FOR PERMITTING	EB
0	04/18/17	ISSUED FOR REVIEW	SB

ATC SITE NUMBER:
201958
SITE NAME:
CORFU

SITE ADDRESS:
9657 FARGO ROAD
DARIEN, NY 14036
GENESEE COUNTY

SHEET TITLE
ELECTRICAL ONE LINE DIAGRAM, NOTES, & DETAILS

SHEET NUMBER
E-1

GROUNDING PLAN NOTES:

1. ALL DETAILS ARE SHOWN IN GENERAL TERMS. ACTUAL INSTALLATION AND CONSTRUCTION MAY VARY DUE TO SITE SPECIFIC CONDITIONS.
2. GROUND ALL ANTENNA BASES, FRAMES, CABLE RUNS, AND OTHER METALLIC COMPONENTS USING GROUND WIRES AND CONNECT TO SURFACE MOUNTED BUS BARS. FOLLOW ANTENNA AND BTS MANUFACTURERS PRACTICES FOR GROUNDING REQUIREMENTS. GROUND COAX SHIELD AT BOTH ENDS AND EXIT FROM TOWER OR POLE USING MFR'S PRACTICES.
3. ALL GROUND CONNECTIONS SHALL BE CADWELD. ALL WIRES SHALL BE COPPER THHN/THWN. ALL GROUND WIRE SHALL BE GREEN INSULATED WIRE ABOVE GROUND.
4. CONTRACTOR TO VERIFY AND TEST GROUND TO SOURCE. GROUNDING AND OTHER OPERATIONAL TESTING WILL BE WITNESSED BY CARRIER REPRESENTATIVE.
5. REFER TO DIVISION 16 GENERAL ELECTRIC; GENERAL ELECTRICAL PROVISION AND COMPLY WITH ALL REQUIREMENTS OF GROUNDING STANDARDS.
6. ELECTRICAL CONTRACTOR TO PROVIDE DETAILED DESIGN OF GROUNDING SYSTEM, AND RECEIVE APPROVAL OF DESIGN BY AUTHORIZED CARRIER REPRESENTATIVE, PRIOR TO INSTALLATION OF GROUNDING SYSTEM. PHOTO DOCUMENT ALL CADWELDS AND GROUND RING
7. NOTIFY CONSTRUCTION MANAGER IF THERE ARE ANY DIFFICULTIES INSTALLING GROUNDING SYSTEM DUE TO SITE SOIL CONDITIONS.
8. TO AVOID TOWER FOUNDATION, GROUND RODS MAY BE INSTALLED AT AN ANGLE OR TOWER GROUND RING MAY BE EXTENDED AS NEEDED.
9. PER SOIL RESISTIVITY MEASUREMENTS, THIS DESIGN PROVIDES FOR XX OHMS RESISTANCE TO REMOTE EARTH.

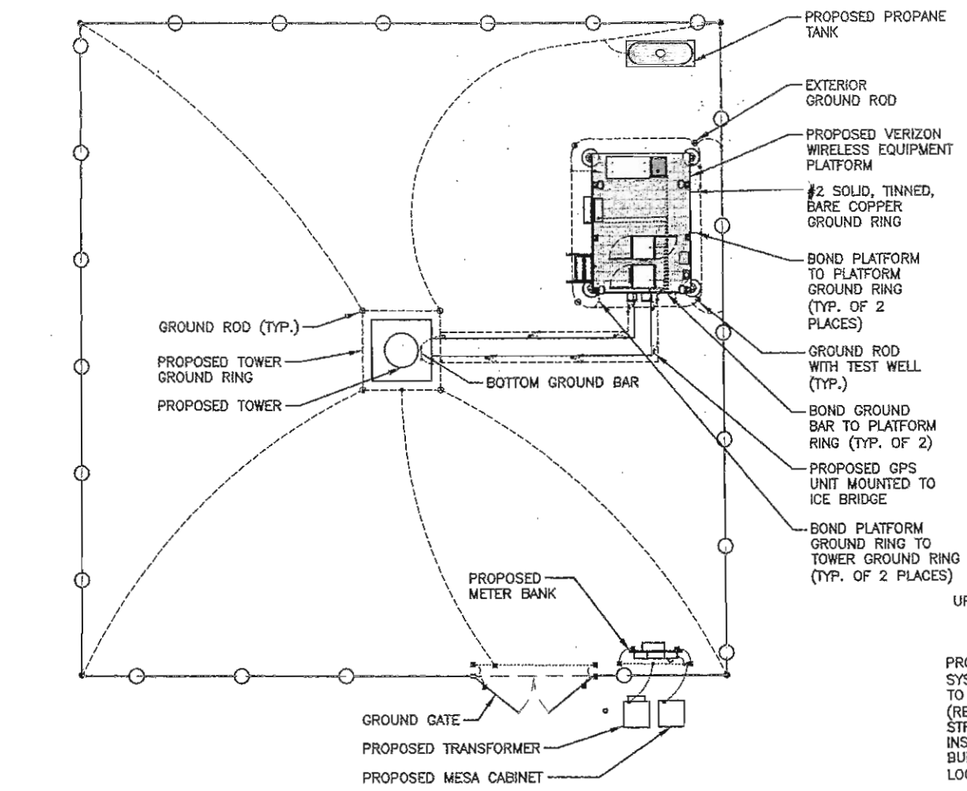

TRUE NORTH
10°55'
MAGNETIC NORTH

GROUNDING PLAN (1 / G-1)
SCALE: N.T.S

NOTE:
1. BASE BID TO INCLUDE INSTALLATION OF A BURIED GROUND RING AND (6) GROUND RODS OR SINGLE XIT HORIZONTAL CHEMICAL ROD AS DETERMINED BY FIELD CONDITIONS. ADDITIONAL RODS AS REQUIRED TO ACHIEVE 5 OHMS RESISTANCE.
2. MAXIMUM VERTICAL/HORIZONTAL DISTANCE BETWEEN CABLE GROUNDING KITS SHALL NOT EXCEED 100 FEET. INSTALL ADDITIONAL KITS AS REQUIRED BY FIELD CONDITIONS.
3. ALL CONNECTIONS TO EQUIPMENT PER MANUFACTURER'S GUIDELINES.
4. ALL ABOVE-GRADE DOWNLEADS TO BGR SHALL BE INSTALLED IN 1" NON-METALLIC CONDUIT SECURED EVERY 2' WITH NON-METALLIC CLIPS.

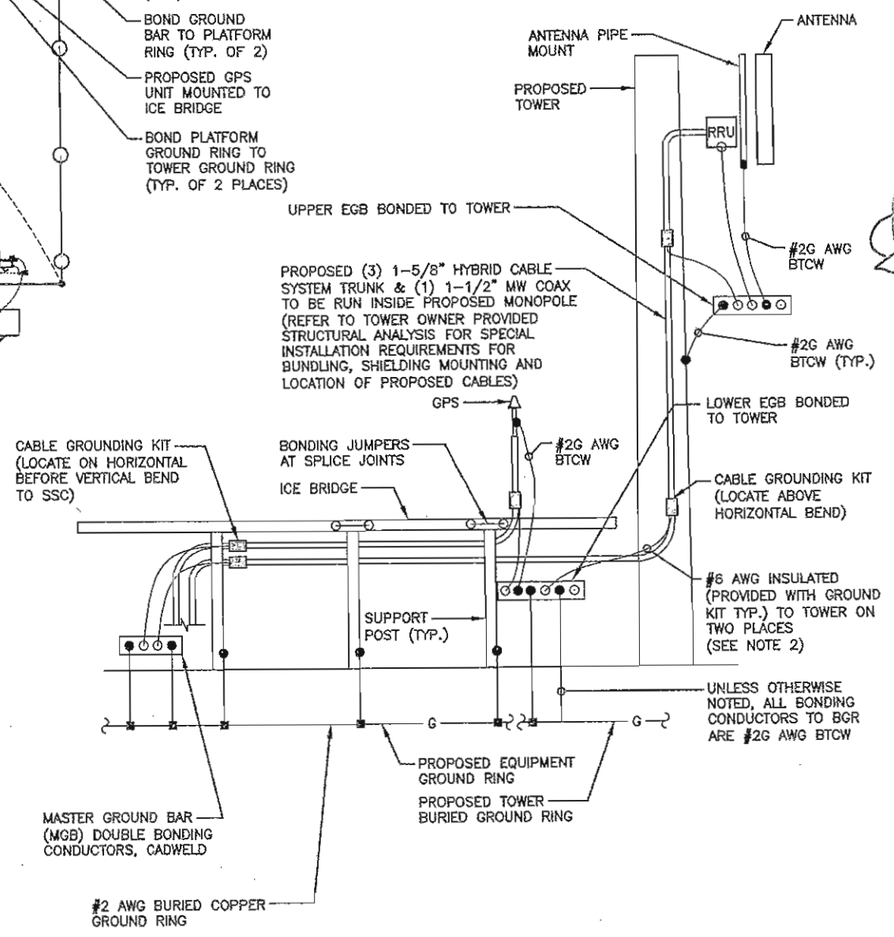

GROUNDING RISER DIAGRAM (3 / G-1)
SCALE: N.T.S

LEGEND

METER	COPPER GROUND BAR
CIRCUIT BREAKER	GROUND CONDUCTOR BY CONTRACTOR
CADWELD TYPE CONNECTION BY CONTRACTOR	GROUND RING BY CONTRACTOR
COAXIAL CABLE SHIELD GROUND KIT CONNECTION	GROUND ROD WITH TEST WELL
COMPRESSION FITTING GROUND CONNECTION	GROUND ROD

ABBREVIATIONS

A	AMPERE	W	WIRE
C	CONDUIT	WP	WEATHERPROOF
GND	GROUND	ø	PHASE
KWH	KILOWATT HOUR	TGB	TOP GROUND BAR
P	POLE	MGB	MASTER GROUND BAR
SN	SOLID NEUTRAL	BGB	BOTTOM GROUND BAR
SW	SWITCH	EGB	EXISTING GROUND BAR
V	VOLT		

AMERICAN TOWER CORPORATION
116 HUNTINGTON AVE. 11TH FLOOR
BOSTON, MA 02116

CELLCO PARTNERSHIP D.B.A.
verizon

Hudson Design Engineering PLLC
29 HAMM ROAD
HUDSON, NY 12534
TEL: (978) 557-5553
FAX: (978) 336-5586

STATE OF NEW YORK
DEREK J. CREASER
099307-1
LICENSED PROFESSIONAL ENGINEER

CHECKED BY: AT
APPROVED BY: DJC

SUBMITTALS

REV.	DATE	DESCRIPTION	BY
5	11/29/17	REVISED FOR PERMITTING	SB
4	08/31/17	REVISED FOR PERMITTING	SB
3	07/17/17	REVISED FOR PERMITTING	SB
2	06/20/17	REVISED FOR PERMITTING	SB
1	04/27/17	ISSUED FOR PERMITTING	EB
0	04/18/17	ISSUED FOR REVIEW	SB

ATC SITE NUMBER:
201958
SITE NAME:
CORFU

SITE ADDRESS:
9657 FARGO ROAD
DARIEN, NY 14036
GENESEE COUNTY

SHEET TITLE
GROUNDING SCHEMATIC & RISER DIAGRAM

SHEET NUMBER
G-1

NOTES:

1. SEPARATION DIMENSION TO BE VERIFIED WITH LOCAL UTILITY COMPANY REQUIREMENTS.
2. COORDINATE UTILITY, LOCATE BEFORE DIGGING.
3. CONDUIT TRENCHING DEPTHS AT 36" OR 6" BELOW FROST LINE, WHICHEVER IS GREATER.
4. ALL RING AND RADIAL DEPTHS AT 30" OR 6" BELOW FROST LINE, WHICHEVER IS GREATER.
5. WELD GROUND TO FENCE AS LOW AS POSSIBLE TO DETER COPPER THEFT

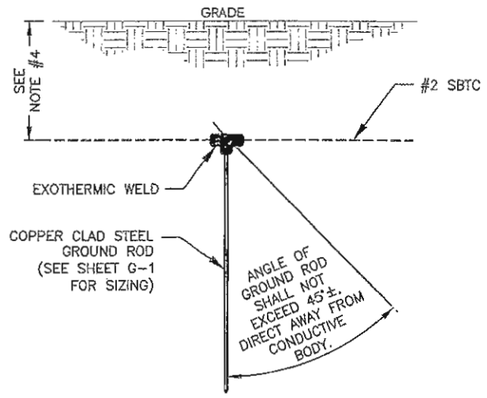

GROUND ROD DETAIL 2 / G-2
SCALE: N.T.S

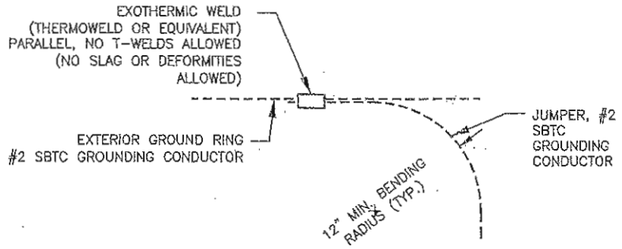

TIE CONNECTION DETAIL 1 / G-2
SCALE: N.T.S

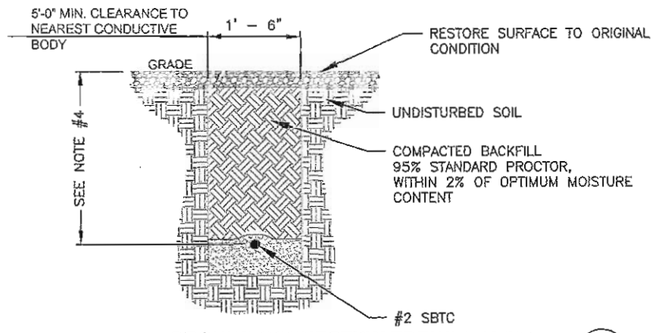

GROUND CONNECTION TRENCH DETAIL 3 / G-2
SCALE: N.T.S

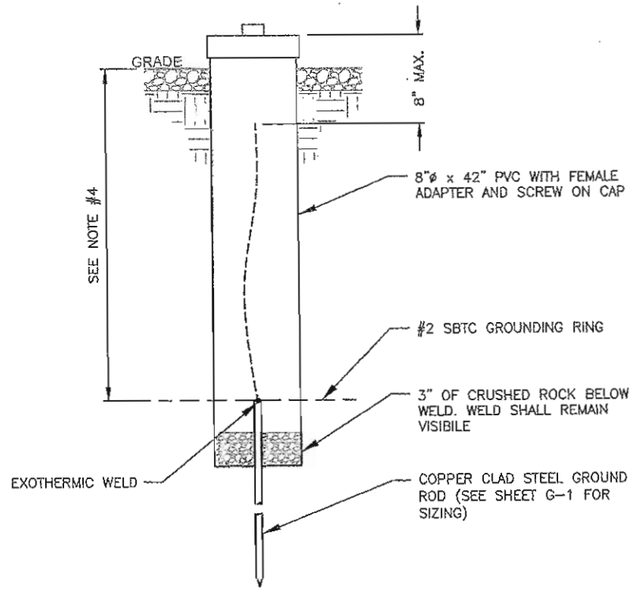

TEST WELL DETAIL 4 / G-2
SCALE: N.T.S

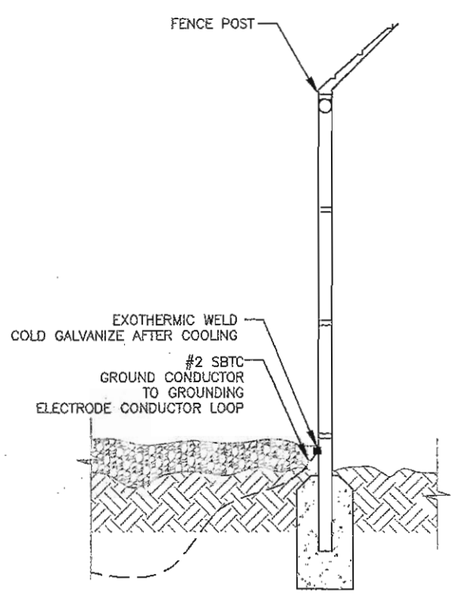

FENCE GROUNDING DETAIL 5 / G-2
SCALE: N.T.S

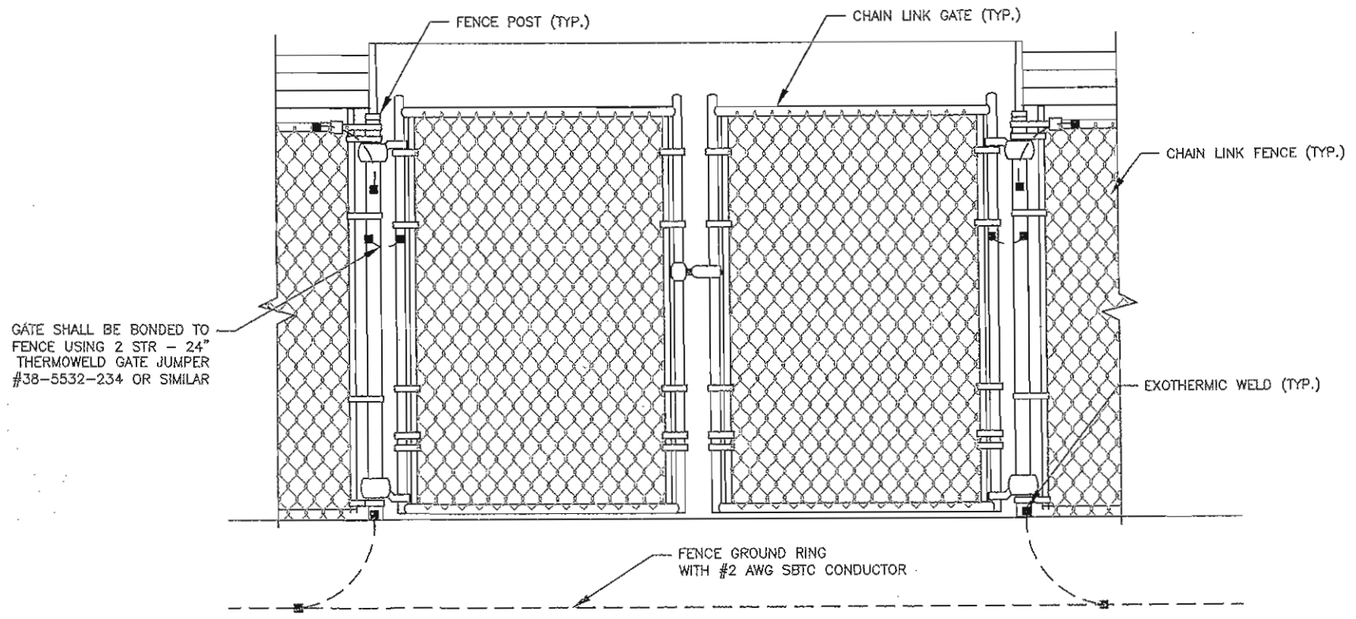

GATE GROUNDING DETAIL 6 / G-2
SCALE: N.T.S

AMERICAN TOWER CORPORATION
116 HUNTINGTON AVE. 11TH FLOOR
BOSTON, MA 02116

CELLCO PARTNERSHIP D.B.A.
verizon

Hudson Design Engineering PLLC
29 HAMM ROAD
HUDSON, NY 12534
TEL: (978) 557-5553
FAX: (978) 336-5586

STATE OF NEW YORK
DEREK J. CREASER
094307-1
LICENSED PROFESSIONAL ENGINEER

CHECKED BY: AT

APPROVED BY: DJC

SUBMITTALS

REV.	DATE	DESCRIPTION	BY
5	11/29/17	REVISED FOR PERMITTING	SB
4	08/31/17	REVISED FOR PERMITTING	SB
3	07/17/17	REVISED FOR PERMITTING	SB
2	06/20/17	REVISED FOR PERMITTING	SB
1	04/27/17	ISSUED FOR PERMITTING	EB
0	04/18/17	ISSUED FOR REVIEW	SB

ATC SITE NUMBER:
201958
SITE NAME:
CORFU

SITE ADDRESS:
9657 FARGO ROAD
DARIEN, NY 14036
GENESEE COUNTY

SHEET TITLE
GROUNDING DETAILS

SHEET NUMBER
G-2

CELLCO PARTNERSHIP

d.b.a. verizon wireless

WIRELESS COMMUNICATIONS FACILITY

SITE NUMBER: 201958

9657 FARGO ROAD
DARIEN, NY 14036
GENESEE COUNTY

SITE NAME: CORFU

GENERAL NOTES

THIS DOCUMENT IS THE CREATION, DESIGN, PROPERTY AND COPYRIGHTED WORK OF VERIZON. ANY DUPLICATION OR USE WITHOUT EXPRESS WRITTEN CONSENT IS STRICTLY PROHIBITED. DUPLICATION AND USE BY GOVERNMENT AGENCIES FOR THE PURPOSES OF CONDUCTING THEIR LAWFULLY AUTHORIZED REGULATORY AND ADMINISTRATIVE FUNCTIONS IS SPECIFICALLY ALLOWED.

THE FACILITY IS AN UNMANNED PRIVATE AND SECURED EQUIPMENT INSTALLATION. IT IS ONLY ACCESSED BY TRAINED TECHNICIANS FOR PERIODIC ROUTINE MAINTENANCE AND THEREFORE DOES NOT REQUIRE ANY WATER OR SANITARY SEWER SERVICE. THE FACILITY IS NOT GOVERNED BY REGULATIONS REQUIRING PUBLIC ACCESS PER ADA REQUIREMENTS.

CONTRACTOR SHALL VERIFY ALL PLANS AND EXISTING DIMENSIONS AND CONDITIONS ON THE JOB SITE AND SHALL IMMEDIATELY NOTIFY THE VERIZON NORTHEAST, LLC REPRESENTATIVE IN WRITING OF DISCREPANCIES BEFORE PROCEEDING WITH THE WORK OR BE RESPONSIBLE FOR SAME.

SPECIAL STRUCTURAL NOTES

TOWER OWNER SHALL PROVIDE GLOBAL STRUCTURAL STABILITY ANALYSIS OF EXISTING ANTENNA SUPPORT STRUCTURE. GENERAL CONTRACTOR SCOPE OF WORK SHALL INCLUDE ALL REQUIRED STRUCTURAL MODIFICATIONS, RE-BUNDLING OF COAXIAL CABLES OR OTHER SPECIAL MODIFICATIONS AS OUTLINED THEREIN.

PROJECT SUMMARY

SCOPE OF WORK:	UNMANNED TELECOMMUNICATIONS FACILITY VERIZON EQUIPMENT INSTALLATION
ZONING JURISDICTION:	(TOWN OF DARIEN)
SITE ADDRESS:	9657 FARGO ROAD DARIEN, NY 14036
LATITUDE:	42° 56' 51.50" N
LONGITUDE:	78° 26' 08.99" W
ASSESSOR'S LOT REFERENCE:	1-1-37.2 2-1-9.2
ZONING DISTRICT:	LOW DENSITY RESIDENTIAL (LDR)
JURISDICTION:	NATIONAL, STATE & LOCAL CODES OR ORDINANCES
CURRENT USE:	UNDEVELOPED LAND
PROPOSED USE:	TELECOMMUNICATIONS FACILITY
FEMA FLOOD HAZARD DESIGNATION:	ZONE X
TOWER OWNER:	AMERICAN TOWER CORPORATION 116 HUNTINGTON AVENUE 11TH FLOOR BOSTON, MA 02116
ATC SITE ID:	201958
ATC SITE NAME:	CORFU

APPROVALS

PROJECT MANAGER	DATE
CONSTRUCTION	DATE
RF ENGINEERING	DATE
ZONING / SITE ACQ.	DATE
OPERATIONS	DATE
TOWER OWNER	DATE

DRIVING DIRECTIONS:

FROM I-90:

TAKE EXIT 48A TURN RIGHT ONTO RT-77 / ALLEGHANY RD. 3.0 MI. TURN RIGHT ONTO RT-33 / W MAIN ST. 1.8 MI. TURN LEFT ONTO FARGO RD / CR-4. 0.5 MI.

ARRIVE AT ENTRANCE TO SITE ON THE RIGHT.

Dig Safely. New York Call 811 before you dig

CALL BEFORE YOU DIG

CALL TOLL FREE 1-800-962-7962

OR CALL 811

UNDERGROUND SERVICE ALERT

DRAWING INDEX

SHEET NO.	DESCRIPTION	REV.
T-1	TITLE SHEET	5
GN-1	GENERAL NOTES	5
V-101	ABUTTERS-PLAN	0
V-102	EXISTING CONDITIONS	0
V-103	EXISTING CONDITIONS	0
C-1	SITE PLAN	5
C-2	500' RADIUS PLAN	5
A-1	COMPOUND PLAN & ELEVATION	5
A-2	ANTENNA PLAN & DETAILS	5
A-3	EQUIPMENT DETAILS	5
A-4	PLATFORM & EQUIPMENT DETAILS	5
A-5	PLATFORM FOUNDATION DETAILS	5
A-6	EROSION CONTROL NOTES & DETIALS	5
E-1	ELECTRICAL DETAILS & NOTES	5
G-1	GROUNDING SCHEMATIC & RISER DIAGRAM	5
G-2	GROUNDING DETAILS	5

AMERICAN TOWER CORPORATION
116 HUNTINGTON AVE. 11TH FLOOR
BOSTON, MA 02116

CELLCO PARTNERSHIP D.B.A.
verizon

Hudson Design Engineering PLLC
29 HAMM ROAD
HUDSON, NY 12534
TEL: (978) 557-5553
FAX: (978) 336-5586

STATE OF NEW YORK
DEREK J. CREASER
094307-1
LICENSED PROFESSIONAL ENGINEER

CHECKED BY: AT

APPROVED BY: DJC

SUBMITTALS

REV.	DATE	DESCRIPTION	BY
5	11/28/17	REVISED FOR PERMITTING	SB
4	08/31/17	REVISED FOR PERMITTING	SB
3	07/17/17	REVISED FOR PERMITTING	SB
2	06/20/17	REVISED FOR PERMITTING	SB
1	04/27/17	ISSUED FOR PERMITTING	EB
0	04/18/17	ISSUED FOR REVIEW	SB

ATC SITE NUMBER:
201958
SITE NAME:
CORFU

SITE ADDRESS:
9657 FARGO ROAD
DARIEN, NY 14036
GENESEE COUNTY

SHEET TITLE
TITLE SHEET

SHEET NUMBER
T-1

GENERAL CONSTRUCTION NOTES:

1. ALL WORK SHALL CONFORM TO ALL CURRENT APPLICABLE FEDERAL, STATE, AND LOCAL CODES, INCLUDING ANSI/EIA/TIA-222, AND COMPLY WITH ATC MASTER SPECIFICATIONS FOR WIRELESS TOWER SITES.
2. CONTRACTOR SHALL CONTACT LOCAL 811 FOR IDENTIFICATION OF UNDERGROUND UTILITIES PRIOR TO START OF CONSTRUCTION.
3. CONTRACTOR IS RESPONSIBLE FOR COORDINATING ALL REQUIRED INSPECTIONS.
4. ALL DIMENSIONS TO, OF, AND ON EXISTING BUILDINGS, DRAINAGE STRUCTURES, AND SITE IMPROVEMENTS SHALL BE VERIFIED IN FIELD BY CONTRACTOR WITH ALL DISCREPANCIES REPORTED TO THE ENGINEER.
5. DO NOT CHANGE SIZE OR SPACING OF STRUCTURAL ELEMENTS.
6. DETAILS SHOWN ARE TYPICAL; SIMILAR DETAILS APPLY TO SIMILAR CONDITIONS UNLESS OTHERWISE NOTED.
7. THESE DRAWINGS DO NOT INCLUDE NECESSARY COMPONENTS FOR CONSTRUCTION SAFETY WHICH IS THE SOLE RESPONSIBILITY OF THE CONTRACTOR.
8. CONTRACTOR SHALL BRACE STRUCTURES UNTIL ALL STRUCTURAL ELEMENTS NEEDED FOR STABILITY ARE INSTALLED. THESE ELEMENTS ARE AS FOLLOWS: LATERAL BRACING, ANCHOR BOLTS, ETC.
9. CONTRACTOR SHALL DETERMINE EXACT LOCATION OF EXISTING UTILITIES, GROUNDS DRAINS, DRAIN PIPES, VENTS, ETC. BEFORE COMMENCING WORK.
10. INCORRECTLY FABRICATED, DAMAGED, OR OTHERWISE MISFITTING OR NONCONFORMING MATERIALS OR CONDITIONS SHALL BE REPORTED TO THE ATC CM PRIOR TO REMEDIAL OR CORRECTIVE ACTION. ANY SUCH REMEDIAL ACTION SHALL REQUIRE WRITTEN APPROVAL BY THE ATC CM PRIOR TO PROCEEDING.
11. EACH CONTRACTOR SHALL COOPERATE WITH THE ATC CM, AND COORDINATE HIS WORK WITH THE WORK OF OTHERS.
12. CONTRACTOR SHALL REPAIR ANY DAMAGE CAUSED BY CONSTRUCTION OF THIS PROJECT TO MATCH EXISTING PRE-CONSTRUCTION CONDITIONS TO THE SATISFACTION OF THE ATC CONSTRUCTION MANAGER.
13. ALL CABLE/CONDUIT ENTRY/EXIT PORTS SHALL BE WEATHERPROOFED DURING INSTALLATION USING A SILICONE SEALANT.
14. WHERE EXISTING CONDITIONS DO NOT MATCH THOSE SHOWN IN THIS PLAN SET, CONTRACTOR WILL NOTIFY THE ATC CONSTRUCTION MANAGER IMMEDIATELY.
15. CONTRACTOR SHALL ENSURE ALL SUBCONTRACTORS ARE PROVIDED WITH A COMPLETE AND CURRENT SET OF DRAWINGS AND SPECIFICATIONS FOR THIS PROJECT.
16. ALL ROOF WORK SHALL BE DONE BY A QUALIFIED AND EXPERIENCED ROOFING CONTRACTOR IN COORDINATION WITH ANY CONTRACTOR WARRANTING THE ROOF TO ENSURE THAT THE WARRANTY IS MAINTAINED.
17. CONTRACTOR SHALL REMOVE ALL RUBBISH AND DEBRIS FROM THE SITE AT THE END OF EACH DAY.
18. CONTRACTOR SHALL COORDINATE WORK SCHEDULE WITH LANDLORD AND TAKE PRECAUTIONS TO MINIMIZE IMPACT AND DISRUPTION OF OTHER OCCUPANTS OF THE FACILITY.
19. CONTRACTOR SHALL FURNISH ATC WITH THREE AS-BUILT SETS OF DRAWINGS UPON COMPLETION OF WORK.
20. PRIOR TO SUBMISSION OF BID, CONTRACTOR SHALL COORDINATE WITH ATC CM TO DETERMINE WHAT, IF ANY, ITEMS WILL BE PROVIDED. ALL ITEMS NOT PROVIDED SHALL BE PROVIDED AND INSTALLED BY THE CONTRACTOR. CONTRACTOR WILL INSTALL ALL ITEMS PROVIDED.
21. PRIOR TO SUBMISSION OF BID, CONTRACTOR WILL COORDINATE WITH ATC CONSTRUCTION MANAGER TO DETERMINE IF ANY PERMITS WILL BE OBTAINED BY ATC. ALL REQUIRED PERMITS NOT OBTAINED BY ATC MUST BE OBTAINED, AND PAID FOR, BY THE CONTRACTOR.
22. CONTRACTOR SHALL SUBMIT ALL SHOP DRAWINGS TO ATC FOR REVIEW AND APPROVAL PRIOR TO FABRICATION.
23. ALL EQUIPMENT SHALL BE INSTALLED ACCORDING TO MANUFACTURER'S SPECIFICATIONS AND LOCATED ACCORDING TO ATC SPECIFICATIONS, AND AS SHOWN IN THESE PLANS.
24. THE CONTRACTOR SHALL SUPERVISE AND DIRECT THE PROJECT DESCRIBED HEREIN. THE CONTRACTOR SHALL BE SOLELY RESPONSIBLE FOR ALL THE CONSTRUCTION MEANS, METHODS, TECHNIQUES, SEQUENCES AND PROCEDURES AND FOR COORDINATING ALL PORTIONS OF THE WORK UNDER THE CONTRACT.
25. CONTRACTOR SHALL NOTIFY ATC CM A MINIMUM OF 48 HOURS IN ADVANCE OF POURING CONCRETE OR BACKFILLING ANY UNDERGROUND UTILITIES, FOUNDATIONS OR SEALING ANY WALL, FLOOR OR ROOF PENETRATIONS FOR ENGINEERING REVIEW AND APPROVAL.

EROSION AND SEDIMENTATION CONTROL PLAN NOTES:

THIS PLAN HAS BEEN DEVELOPED TO PROVIDE A STRATEGY FOR CONTROLLING SOIL EROSION AND SEDIMENTATION DURING AND AFTER CONSTRUCTION OF THE PROPOSED FACILITY. THE EQUIPMENT ANTICIPATED TO BE USED FOR THE CONSTRUCTION INCLUDES THE FOLLOWING: BACKHOES, BULLDOZERS, LOADERS, TRUCKS, CRANES, COMPACTORS, AND GRADERS. THE FOLLOWING MEASURES WILL BE UNDERTAKEN TO PROVIDE MAXIMUM PROTECTION TO THE SOIL, WATER, AND ABUTTING LANDS:

1. ALL EARTH DISTURBANCE ACTIVITIES SHALL PROCEED IN ACCORDANCE WITH THE SEQUENCE PROVIDED ON THE PLAN DRAWINGS. DEVIATION FROM THAT SEQUENCE MUST BE APPROVED IN WRITING FROM AMERICAN TOWER PRIOR TO IMPLEMENTATION.
2. THE LIMITS OF DISTURBANCE (LOD) SHOULD BE MARKED PRIOR TO DISTURBANCE ACTIVITIES (I.E. SURVEY STAKES, POSTS & ROPE, CONSTRUCTION FENCE, ETC.).
3. A COPY OF THE SEDIMENT AND EROSION CONTROL PLAN MUST BE AVAILABLE AT THE PROJECT SITE DURING CONSTRUCTION UNTIL THE SITE IS STABILIZED. (AS APPLICABLE)
4. PRIOR TO GRUBBING OR ANY EARTHMOVING OPERATION, SILTATION FENCE WILL BE INSTALLED ACROSS THE SLOPE ON THE CONTOUR AT THE DOWNHILL LIMIT OF THE WORK AS PROTECTION AGAINST CONSTRUCTION RELATED EROSION. (CONSULT ATC CM AS REQUIRED)
5. STONE CHECK DAMS WILL BE INSTALLED IN THE DRAINAGE DITCHES TO PREVENT EROSION PRIOR TO THE STABILIZATION OF THE CHANNELS. EROSION CONTROL BLANKETS WILL ALSO BE INSTALLED IN ALL DITCHES TO BE REVEGETATED.
6. PERMANENT SOIL EROSION CONTROL MEASURES FOR ALL SLOPES, CHANNELS, DITCHES, OR ANY UNDISTURBED LAND AREA WILL BE COMPLETED WITHIN FIFTEEN CALENDAR DAYS AFTER FINAL GRADING HAS BEEN COMPLETED. WHEN IT IS NOT POSSIBLE OR PRACTICAL TO PERMANENTLY STABILIZE DISTURBED LAND, TEMPORARY EROSION CONTROL MEASURES WILL BE IMPLEMENTED WITHIN THIRTY CALENDAR DAYS OF EXPOSURE OF SOIL. ALL DISTURBED AREAS WILL BE MULCHED FOR EROSION CONTROL UPON COMPLETION OF ROUGH GRADING. CUT SLOPES IN COMPETENT BEDROCK AND ROCK FILLS NEED NOT BE VEGETATED.
7. ANY EXPOSED SLOPES GREATER THAN 2:1 AND NEWLY CONSTRUCTED DRAINAGE DITCHES WILL BE STABILIZED WITH EROSION CONTROL BLANKET TO PREVENT EROSION DURING CONSTRUCTION AND TO FACILITATE REVEGETATION AFTER LOAMING AND SEEDING.
8. TO PROVIDE PROTECTION AGAINST EROSION, RIPRAP WILL BE PLACED AT ALL CULVERT INLETS AND OUTLETS AS SHOWN ON THE ATTACHED DRAWINGS.
9. IN AREAS OF CONSTRUCTION DEWATERING, ISOLATED SETTLEMENT TRAPS WILL BE CONSTRUCTED ADJACENT TO THE ACTIVITY. WATER WILL BE PUMPED FROM THE EXCAVATIONS TO THESE DEPRESSION AREAS FOR SEDIMENT REMOVAL. ADDITIONAL SEDIMENTATION PROTECTION WILL BE PROVIDED BY THE INSTALLATION OF HAYBALE BARRIERS BETWEEN THE BASINS AND THE RECEIVING DRAINAGE COARSE.
10. NATIVE TOPSOIL SHALL BE SAVED, STOCKPILED, MULCHED, AND REUSED AS MUCH AS POSSIBLE ON THE SITE. SILTATION FENCE SHALL BE INSTALLED AT THE BASE OF STOCKPILES AT THE DOWNHILL LIMIT TO PROTECT AGAINST EROSION. STOCKPILES WILL BE STABILIZED BY SEEDING AND MULCHING UPON FORMATION OF THE PILES. UPHILL OF THE STOCKPILES, STABILIZED DITCHES AND/OR BERMS WILL BE CONSTRUCTED TO DIVERT STORMWATER RUNOFF AWAY FROM THE PILES.
11. FINAL SEEDING WILL BE APPLIED IN ACCORDANCE WITH THE AMERICAN TOWER CORPORATION MASTER SPECIFICATION.
12. SHOULD CONSTRUCTION OCCUR AFTER NOVEMBER 15, ADDITIONAL EROSION CONTROL METHODS WILL BE IMPLEMENTED. ALL DISTURBED AREAS WILL BE MINIMIZED AS MUCH AS POSSIBLE. PRIOR TO FREEZING, ADDITIONAL EROSION CONTROL DEVICES WILL BE INSTALLED AS APPROPRIATE INSPECTION OF THESE EROSION CONTROL ITEMS WILL BE CONSTANT, WITH PARTICULAR ATTENTION PAID TO WEATHER PREDICTIONS TO ENSURE THAT THESE MEASURES ARE PROPERLY IN PLACE TO HANDLE LARGE AMOUNTS OF RUNOFF FROM HEAVY RAINS OR THAWS.
13. FOR AN EARTH DISTURBANCE ACTIVITY OR ANY STAGE OR PHASE OF AN ACTIVITY TO BE CONSIDERED PERMANENTLY STABILIZED, THE DISTURBED AREAS SHALL BE COVERED BY A MINIMUM UNIFORM 70% PERENNIAL VEGETATIVE COVER OR OTHER PERMANENT NON-VEGETATIVE COVER WITH A DENSITY SUFFICIENT TO RESIST ACCELERATED EROSION AND SUBSURFACE CHARACTERISTICS SUFFICIENT TO RESIST SLIDING AND OTHER MOVEMENTS.
14. THE CONTRACTOR WILL REGULARLY INSPECT THE PROJECT'S EROSION AND SEDIMENTATION CONTROLS DURING THE ENTIRE ACTIVE CONSTRUCTION STAGES. THE INSPECTIONS WILL BE PERFORMED WEEKLY AND AFTER ALL RUNOFF EVENTS. THE CONTRACTOR WILL BE RESPONSIBLE FOR THE INSTALLATION, OPERATION, MAINTENANCE, AND REMOVAL OF ALL EROSION AND SEDIMENTATION CONTROLS. ALL PREVENTATIVE AND REMEDIAL MAINTENANCE WORK, INCLUDING CLEAN OUT REPAIR, REPLACEMENT, REGRADING, RESEEDING, REMULCHING, AND RENETTING MUST BE PERFORMED IMMEDIATELY. SEDIMENT THAT HAS BEEN TRAPPED BY THE SILT BARRIER WILL BE REMOVED AS REQUIRED, AND IN ALL CASES, BEFORE THE ACCUMULATION HAS REACHED HALF THE HEIGHT OF THE FENCE. THE SILT BARRIER WILL BE RE-ANCHORED, REPAIRED, OR REPLACED AS NECESSARY. ALL OTHER CONTROLS WILL BE INSPECTED ON THE SAME SCHEDULE. IF EROSION AND SEDIMENT CONTROL BMP'S FAIL TO PERFORM AS EXPECTED, REPLACEMENT BMP'S, OR MODIFICATION OF THOSE INSTALLED WILL BE REQUIRED.
15. ALL FILLS SHALL BE COMPACTED AS REQUIRED TO REDUCE EROSION, SLIPPAGE, SETTLEMENT, SUBSIDENCE OR OTHER RELATED PROBLEMS. FILL INTENDED TO SUPPORT BUILDINGS, STRUCTURES AND CONDUITS, ETC. SHALL BE COMPACTED IN ACCORDANCE WITH LOCAL REQUIREMENTS OR CODES.
16. ALL EARTHEN FILLS SHALL BE PLACED IN COMPACTED LAYERS NOT TO EXCEED 9 INCHES IN THICKNESS.
17. FILL MATERIALS SHALL BE FREE OF FROZEN PARTICLES, BRUSH, ROOTS, SOD, OR OTHER FOREIGN OR OBJECTIONABLE MATERIALS THAT WOULD INTERFERE WITH OR PREVENT CONSTRUCTION OF SATISFACTORY FILLS. FILL SHALL NOT BE PLACED ON SATURATED OR FROZEN SURFACES.
18. SEEPS OR SPRINGS ENCOUNTERED DURING CONSTRUCTION SHALL BE HANDLED IN ACCORDANCE WITH THE AMERICAN TOWER CORPORATION MASTER SPECIFICATION AND/OR THE CONTRACTOR SHALL NOTIFY THE ATC CONSTRUCTION MANAGER.
19. SEDIMENT TRACKED ONTO ANY PUBLIC ROADWAY OR SIDEWALK SHALL BE RETURNED TO THE CONSTRUCTION SITE BY THE END OF EACH WORK DAY AND DISPOSED IN THE MANNER DESCRIBED IN THIS PLAN. IN NO CASE SHALL THE SEDIMENT BE WASHED, SHOVELED, OR SWEPT INTO ANY ROADSIDE DITCH, STORM SEWER, OR SURFACE WATER.

CONSTRUCTION SEQUENCE:

1. INSTALL ROCK CONSTRUCTION ENTRANCE AND ALL PERIMETER BMP'S AS SHOWN ON THE PLANS.
2. CLEAR TREES AND LIMBS FOR FULL WIDTH OF EASEMENT AND LEASE AREA, GROUND TO SKY.
3. STRIP TOPSOIL FOR THE ACCESS DRIVE AND STORE AT DESIGNATED LOCATIONS AS SHOWN ON THE PLANS OR LOCATION AS AGREED UPON WITH THE ATC CONSTRUCTION MANAGER.
4. BEGIN GRADING AND INSTALL GRAVEL, ROADSIDE DITCHES, AND CULVERTS WITH OUTLET PROTECTION.
5. STRIP TOPSOIL ACROSS COMPOUND AND STORE AT DESIGNATED LOCATIONS AS SHOWN ON THE PLANS OR LOCATION AS AGREED UPON WITH THE ATC CONSTRUCTION MANAGER.
6. CONSTRUCT DETENTION AREA AND DITCHES DIVERTING RUNOFF AROUND THE COMPOUND TO THE DETENTION AREA. START DOWNSLOPE AT THE DETENTION AREA AND WORK UPGRADE.
7. GRADE COMPOUND SITE AND INSTALL GRAVEL. IMMEDIATELY STABILIZE FILL AND CUT SLOPES WITH EROSION CONTROL MATTING OR ROCK.
8. ONCE CONSTRUCTION OF COMPOUND AND ACCESS DRIVE IS COMPLETE, BEGIN CONSTRUCTION OF TOWER AND ASSOCIATED FACILITIES AND UTILITIES AS SHOWN ON THE DRAWINGS.
9. IF CONSTRUCTION IS TERMINATED OR SUSPENDED PRIOR TO CONSTRUCTION COMPLETION, ALL EXPOSED SOIL AREAS SHALL BE SEEDED WITH TEMPORARY SEEDING AND MULCHED IMMEDIATELY.
10. IT SHALL BE THE CONTRACTOR'S RESPONSIBILITY TO MAINTAIN ALL SEDIMENT AND EROSION CONTROL FACILITIES IN EFFECTIVE WORKING ORDER DURING CONSTRUCTION AND UNTIL ALL EXPOSED SOIL AREAS HAVE BEEN STABILIZED.
11. AFTER FINAL STABILIZATION HAS BEEN ACHIEVED, TEMPORARY BMP'S SHALL BE REMOVED. ACHIEVING 70% STABILIZATION, THE E&S CONTROLS CAN BE REMOVED. STONE IS CONSIDERED TO BE STABILIZED. AREAS DISTURBED DURING REMOVAL OR TEMPORARY E&S BMP'S REMOVAL ARE TO BE STABILIZED IMMEDIATELY.

CONCRETE AND REINFORCING STEEL NOTES:

1. DESIGN AND CONSTRUCTION OF ALL CONCRETE ELEMENTS SHALL CONFORM TO THE LATEST EDITIONS OF ALL APPLICABLE CODES INCLUDING: ACI 301 "SPECIFICATIONS FOR STRUCTURAL CONCRETE FOR BUILDINGS", AND ACI 318 "BUILDING CODE REQUIREMENTS FOR REINFORCED CONCRETE".
2. MIX DESIGN SHALL BE APPROVED BY OWNER'S REPRESENTATIVE AND SUBMITTED TO ENGINEER PRIOR TO PLACING CONCRETE.
3. CONCRETE SHALL BE NORMAL WEIGHT, 6 % AIR ENTRAINED (+/- 1.5%) WITH A MAXIMUM 4" SLUMP AND HAVE A MINIMUM 28-DAY COMPRESSIVE STRENGTH OF 4000 PSI UNLESS OTHERWISE NOTED.
4. THE FOLLOWING MATERIALS SHALL BE USED:
   - PORTLAND CEMENT: ASTM C-150, TYPE 1 OR 2
   - REINFORCEMENT: ASTM A-185, PLAIN STEEL WELDED WIRE FABRIC
   - REINFORCEMENT BARS: ASTM A615, GRADE 60, DEFORMED
   - NORMAL WEIGHT AGGREGATE: ASTM C-33
   - WATER: DRINKABLE
   - ADMIXTURES: NON-CHLORIDE CONTAINING
5. MINIMUM CONCRETE COVER FOR REINFORCING STEEL SHALL BE AS FOLLOWS (UNLESS OTHERWISE NOTED):
   - A. CONCRETE CAST AGAINST EARTH: 3"
   - B. ALL OTHER CONCRETE: 2"
6. A 3/4" CHAMFER SHALL BE PROVIDED AT ALL EXPOSED EDGES OF CONCRETE IN ACCORDANCE WITH ACI 301 SECTION 4.2.4, UNLESS NOTED OTHERWISE.
7. INSTALLATION OF CONCRETE EXPANSION/WEDGE ANCHOR SHALL BE PER MANUFACTURER'S WRITTEN RECOMMENDED PROCEDURE. THE ANCHOR BOLT, DOWEL, OR ROD SHALL CONFORM TO MANUFACTURER'S RECOMMENDATION FOR EMBEDMENT DEPTH OR AS SHOWN ON THE DRAWINGS. NO REBAR SHALL BE CUT WITHOUT PRIOR ATC CM APPROVAL WHEN DRILLING HOLES IN CONCRETE.
8. ADMIXTURES SHALL CONFORM TO THE APPROPRIATE ASTM STANDARD AS REFERENCED IN ACI 301.
9. DO NOT WELD OR TACK WELD REINFORCING STEEL.
10. ALL DOWELS, ANCHOR BOLTS, EMBEDDED STEEL, ELECTRICAL CONDUITS, PIPE SLEEVES, GROUNDS AND ALL OTHER EMBEDDED ITEMS AND FORMED DETAILS SHALL BE IN PLACE BEFORE START OF CONCRETE PLACEMENT.
11. REINFORCEMENT SHALL BE COLD BENT WHENEVER BENDING IS REQUIRED.
12. DO NOT PLACE CONCRETE IN WATER, ICE, OR ON FROZEN GROUND.
13. DO NOT ALLOW REINFORCEMENT, CONCRETE OR SUBBASE TO FREEZE DURING CONCRETE CURING AND SETTING PERIOD, OR FOR A MINIMUM OF 3 DAYS AFTER PLACEMENT.
14. FOR COLD-WEATHER AND HOT-WEATHER CONCRETE PLACEMENT, CONFORM TO APPLICABLE ACI CODES AND RECOMMENDATIONS. IN EITHER CASE, MATERIALS CONTAINING CHLORIDE, CALCIUM, SALTS, ETC. SHALL NOT BE USED. PROTECT FRESH CONCRETE FROM WEATHER FOR 7 DAYS, MINIMUM.
15. CONCRETE SHALL BE RUBBED TO A ROUGH GROUT FINISH. PADS SHALL BE SEALED BY STEEL TROWEL.
16. UNLESS OTHERWISE NOTED:
    - A. ALL REINFORCING STEEL SHALL BE DEFORMED BARS CONFORMING TO ASTM A615, GRADE 60.
    - B. WELDED WIRE FABRIC SHALL CONFORM TO ASTM A185.
17. SPLICING OF REINFORCEMENT IS PERMITTED ONLY AT LOCATIONS SHOWN IN THE CONTRACT DRAWINGS OR AS ACCEPTED BY THE ENGINEER. UNLESS OTHERWISE SHOWN OR NOTED REINFORCING STEEL SHALL BE SPLICED TO DEVELOP ITS FULL TENSILE CAPACITY (CLASS A) IN ACCORDANCE WITH ACI 318.
18. REINFORCING BAR DEVELOPMENT LENGTHS, AS COMPUTED IN ACCORDANCE WITH ACI 318, FORM THE BASIS FOR BAR EMBEDMENT LENGTHS AND BAR SPLICED LENGTHS SHOWN IN THE DRAWINGS. APPLY APPROPRIATE MODIFICATION FACTORS FOR TOP STEEL, BAR SPACING, COVER AND THE LIKE.
19. DETAILING OF REINFORCING STEEL SHALL CONFORM TO "ACI MANUAL OF STANDARD PRACTICE FOR DETAILING REINFORCED CONCRETE STRUCTURES" (ACI 315).
20. ALL SLAB CONSTRUCTION SHALL BE CAST MONOLITHICALLY WITHOUT HORIZONTAL CONSTRUCTION JOINTS, UNLESS SHOWN IN THE CONTRACT DRAWINGS.
21. LOCATION OF ALL CONSTRUCTION JOINTS ARE SUBJECT TO THE REQUIREMENTS OF THE CONTRACT DOCUMENTS, CONFORMANCE WITH ACI 318, AND ACCEPTANCE OF THE ENGINEER. DRAWINGS SHOWING LOCATION OF DETAILS OF THE PROPOSED CONSTRUCTION JOINTS SHALL BE SUBMITTED WITH REINFORCING STEEL PLACEMENT DRAWINGS
22. SPLICES OF WWF, AT ALL SPLICED EDGES, SHALL BE SUCH THAT THE OVERLAP MEASURED BETWEEN OUTERMOST CROSS WIRES OF EACH FABRIC SHEET IS NOT LESS THAN THE SPACING OF THE CROSS WIRE PLUS 2 INCHES, NOR LESS THAN 8".
23. BAR SUPPORTS SHALL BE ALL-GALVINIZED METAL WITH PLASTIC TIPS.
24. ALL REINFORCEMENT SHALL BE SECURELY TIED IN PLACE TO PREVENT DISPLACEMENT BY CONSTRUCTION TRAFFIC OR CONCRETE. TIE WIRE SHALL BE 16 GAUGE CONFORMING TO ASTM A82
25. SLAB ON GROUND
    - A. COMPACT STRUCTURAL FILL TO 95% DENSITY AND THEN PLACE 6" GRAVEL BENEATH SLAB.
    - B. PROVIDE VAPOR BARRIER BENEATH SLAB ON GROUND.

GENERAL FOUNDATION NOTES:

(APPLICABLE FOR EQUIPMENT SHELTER ONLY)

1. THOROUGHLY COMPACT BOTTOM OF EXCAVATIONS PRIOR TO PLACING RIGID INSULATION BARRIER. BACKFILL AND COMPACTION PROCEDURES SHALL BE DONE PER INDUSTRY STANDARDS.
2. ALL REINFORCING STEEL SHALL BE ASTM A615 - GRADE 60. SECURE REINFORCING IN PLACE TO PREVENT MOVEMENT DURING CONCRETE PLACEMENT.
3. VERIFY DETAILS AND DIMENSIONS WITH SHELTER DRAWINGS. NOTIFY ATC CM OF ANY DISCREPANCIES.
4. INSULATION BARRIER PROVIDED IS FOR FROST PROTECTION IN LIEU OF STANDARD FOUNDATIONS WITH BEARING AT CODE REQUIRED FROST DEPTH.
5. SHELTER MUST BE ANCHORED TO ITS FOUNDATION. ANCHOR IN ACCORDANCE WITH SHELTER MANUFACTURER SPECIFICATIONS.

AMERICAN TOWER CORPORATION
116 HUNTINGTON AVE. 11TH FLOOR
BOSTON, MA 02116

CELLCO PARTNERSHIP D.B.A.
verizon

Hudson Design Engineering PLLC
29 HAMM ROAD
HUDSON, NY 12534
TEL: (978) 557-5553
FAX: (978) 336-5586

STATE OF NEW YORK
DEREK J. CREASER
094307-1
LICENSED PROFESSIONAL ENGINEER

CHECKED BY: AT

APPROVED BY: DJC

SUBMITTALS

REV.	DATE	DESCRIPTION	BY
5	11/29/17	REVISED FOR PERMITTING	SB
4	08/31/17	REVISED FOR PERMITTING	SB
3	07/17/17	REVISED FOR PERMITTING	SB
2	06/20/17	REVISED FOR PERMITTING	SB
1	04/27/17	ISSUED FOR PERMITTING	EB
0	04/18/17	ISSUED FOR REVIEW	SB

ATC SITE NUMBER:
201958

SITE NAME:
CORFU

SITE ADDRESS:
9657 FARGO ROAD
DARIEN, NY 14036
GENESEE COUNTY

SHEET TITLE
GENERAL NOTES

SHEET NUMBER
GN-1

GENERAL NOTES:

1. Field work was performed by EDM total station.
2. The horizontal datum is New York State Plane West Zone (3103)NAD83 & the vertical datum is NAVD88, both are based on a post–processed dual frequency GPS survey.
3. All underground utility information presented hereon was determined from surface evidence and plans of record. All underground utilities should be located in the field prior to commencement of all site work. Call DigSafely New York 1–800–962–7962 a minimum of 72 hours prior to planned activity.
4. **This is not a boundary survey.**
5. All property lines shown are compiled from deeds, plans of record and monuments found. Abutting property lines are taken from the County of Niagara's Real Property Tax Department & are approximate only.
6. According to Federal Emergency Management Agency maps, site is located in Zone C; Area outside 500 year flood. Community Panel No. 361140 A, Panel No. 02; Effective Date: July 6, 1984.

THIS PLAN WAS PREPARED WITH THE BENEFIT OF A TITLE REPORT PREPARED BY STEWART TITLE GUARANTY COMPANY, FILE No. 142534NY, EFFECTIVE DATE APRIL 14, 2016. SAID TITLE REPORT CONTAINS THE FOLLOWING ENCUMBRANCES TO LOCUS AS SET FORTH IN SCHEDULE B, SECTION II:

1–11: NOT THE TYPE TO BE DEPICTED HEREON.

*12. SUBJECT TO OIL AND GAS AGREEMENT BETWEEN KENNETH L. FEITSHANS AND GFS ENERGY, INC, RECORDED IN DEED BOOK 485 PAGE 117: **NOT RETRACEABLE; NOT DEPICTED HEREON.***

PARENT PARCEL DESCRIPTION:

ALL THAT TRACT OR PARCEL OF LAND, SITUATE IN THE TOWN OF DARIEN, COUNTY OF GENESEE AND STATE OF NEW YORK, BEING PART OF TOWNSHIP/11, RANGE 4 AND PART OF LOT 24, IN SAID TOWNSHIP, BOUNDED AND DESCRIBED AS FOLLOWS: BOUNDED WEST BY LAND DEEDED TO HIRAM K. STEELE, 60 CHAINS AND 65 LINKS; NORTH BY TOWNSHIP 12 IN THE FOURTH RANGE, 14 CHAINS AND 41 LINKS; EAST BY LAND DEEDED TO LEVI M. HARROUN, JAMES M. HARROUN AND GURDON HARTSHORN, 61 CHAINS AND 16 LINKS AND SOUTH BY LOT 23, 14 CHAINS AND 41 LINKS, CONTAINING 87 ½ ACRES BY THE SAME MORE OR LESS.

ALL THAT TRACT OR PARCEL OF LAND, SITUATE IN THE TOWN OF DARIEN, COUNTY OF GENESEE, STATE OF NEW YORK, BEING PART OF LOT NO. 32, TOWNSHIP 11, RANGE 4 OF THE HOLLAND PURCHASE, BOUNDED AS FOLLOWS:
BEGINNING IN THE SOUTH LINE OF SAID LOT IN THE CENTER OF A PUBLIC HIGHWAY AND RUNNING THENCE EAST ON SAID SOUTH LINE 15 CHAINS 90 LINKS; THENCE NORTH 10 30" EAST, 10 CHAINS 17 LINKS; THENCE WEST PARALLEL WITH THE SOUTH LINE OF SAID LOT, 13 CHAINS 78 LINKS TO THE CENTER OF SAID HIGHWAY; THENCE SOUTHWESTERLY ALONG THE CENTER OF SAID HIGHWAY, 10 CHAINS 50 LINKS TO THE PLACE OF BEGINNING, CONTAINING 15.23 ACRES, MORE OR LESS.

EXCEPTING AND RESERVING FROM THE ABOVE DESCRIBED PREMISES 7.62 ACRES OF LAND CONVEYED BY ELIZABETH STOCKLY TO HANNAH GREEN BY DEED RECORDED IN GENESEE COUNTY CLERK'S OFFICE IN LIBER 128, PAGE 260, BOUNDED AS FOLLOWS: BEGINNING AT THE SOUTH LINE OF SAID LOT IN THE CENTER OF A PUBLIC HIGHWAY AND RUNNING THENCE EAST ON SAID SOUTH LINE 15 CHAINS 90 LINKS THENCE NORTH 1° 30" EAST, 5 CHAINS 8 LINKS; THENCE WEST PARALLEL WITH THE SOUTH LINE OF SAID LOT 13 CHAINS 78 LINKS, TO THE CENTER OF SAID HIGHWAY; THENCE SOUTHWESTERLY ALONG THE CENTER OF SAID HIGHWAY 5 CHAINS 25 LINKS TO THE PLACE OF BEGININNING, CONTAINING 7.62 ACRES MORE OR LESS.

ALL THAT TRACT OR PARCEL OF LAND, SITUATE IN SAID TOWN OF DARIEN, GENESEE COUNTY, NEW YORK, DISTINGUISHED AS BEING PART OF LOT 32, TOWNSHIP 11, RANGE 4 OF THE HOLLAND PURCHASE, BOUNDED AS FOLLOWS:
BEGINNING IN THE SOUTHEAST CORNER OF MRS. GROAT'S LAND AND RUNNING THENCE EAST 7 CHAINS 84 LINKS; THENCE NORTHERLY 16 CHAINS AND 76 LINKS TO A POINT 7 CHAINS 56 LINKS FROM THE EAST LINE OF THOMAS BENNETT'S LAND; THENCE WEST 7 CHAINS 67 LINKS TO SAID BENNETT'& EAST LINE; THENCE SOUTH 16 CHAINS 76 LINKS TO THE PLACE OF BEGINNING, CONTAINING 13 ACRES OF LAND, BE THE SAME MORE OR LESS.

ALL THAT TRACT OR PARCEL OF LAND, SITUATE IN THE TOWN OF DARIEN, COUNTY OF GENESEE AND STATE OF NEW YORK, BEING PART OF LOTS NOS. 24 AND 32, TOWNSHIP 11 AND RANGE 4 OF THE HOLLAND LAND COMPANY'S SURVEY, DESCRIBED AS FOLLOWS:
BEGINNING AT THE INTERSECTION OF THE EASTERLY BOUNDS OF LAND CONVEYED TO FRANK E. HAMPTON AND HELEN A. HAMPTON, HIS WIFE BY STANLEY KOWALIK AND MILDRED KOWALIK, HIS WIFE ON AUGUST 18, 1954 AND RECORDED IN THE GENESEE COUNTY CLERK'S OFFICE IN LIBER 310 AT PAGE 253, WITH SOUTHERLY BOUNDS OF LAND OF THE NEW YORK CENTRAL RAILROAD COMPANY; THENCE SOUTH ON THE EASTERLY BOUNDS OF LAND SO CONVEYED TO HAMPTON 3200.9 FEET TO THE NORTH BOUNDS OF LOT NO. 23; THENCE WEST ALONG THE NORTH BOUNDS OF SAID LOT NO. 23 AND THE NORTH BOUNDS OF LOT NO. 31, A DISTANCE OF 1271.16 FEET TO THE SOUTHEAST CORNER OF LAND CONVEYED TO JOHN BARRY BY CHAUNCEY B. ASHLEY AND PHILIP B. ASHLEY ON FEBRUARY 7, 1877 AND RECORDED IN LIBER 147 AT PAGE 42; THENCE NORTHERLY ALONG THE EASTERLY BOUNDS OF SAID BARRY'S LAND 1106.16 FEET TO THE NORTHEASTERLY CORNER THEREOF; THENCE WESTERLY ALONG SAID BARRY'S LAND 506.22 FEET TO THE NORTHWESTERLY CORNER THEREOF; THENCE NORTHERLY ALONG THE WESTERLY BOUNDS OF LAND CONVEYED TO HAMPTON ABOVE MENTIONED 1706.76 FEET TO THE SOUTHERLY BOUNDS OF LAND OF THE NEW YORK CENTRAL RAILROAD COMPANY; THENCE NORTHEASTERLY ALONG SAID RAILROAD COMPANY'S LAND 1877 FEET TO THE PLACE OF BEGINNING, CONTAINING 112 ACRES OF LAND MORE OR LESS.
**EXCEPTING AND RESERVING THEREFROM THE LAND DEEDED BY OREN LONG AND HANNAH LONG, HIS WIFE, TO SAMUEL C. HIGGINS, BY DEED DATED JULY 8, 1850, RECORDED IN LIBER 78 OF DEEDS, AT PAGE 215;*
EXCEPTING ALSO THE LAND DEED BY OREN LONG AND HANNAH LONG, HIS WIFE, TO THE BUFFALO AND ROCHESTER RAILROAD COMPANY BY DEED RECORDED IN LIBER 79 OF DEEDS, AT PAGE 435.
EXCEPTING ALSO THEREFROM THE LAND DEEDED BY OREN LONG AND HANNAH LONG TO THE BUFFALO AND ROCHESTER RAILROAD COMPANY, BY DEED RECORDED IN LIBER 83 OF DEEDS AT PAGE 109.
EXCEPTING ALSO THE LAND DEEDED BY ROMEYN S. LANG AND ONE TO THE NEW YORK CENTRAL AND HUDSON RIVER RAIL ROAD COMPANY BY DEED RECORDED IN LIBER 140 OF DEEDS, AT PAGE 212.

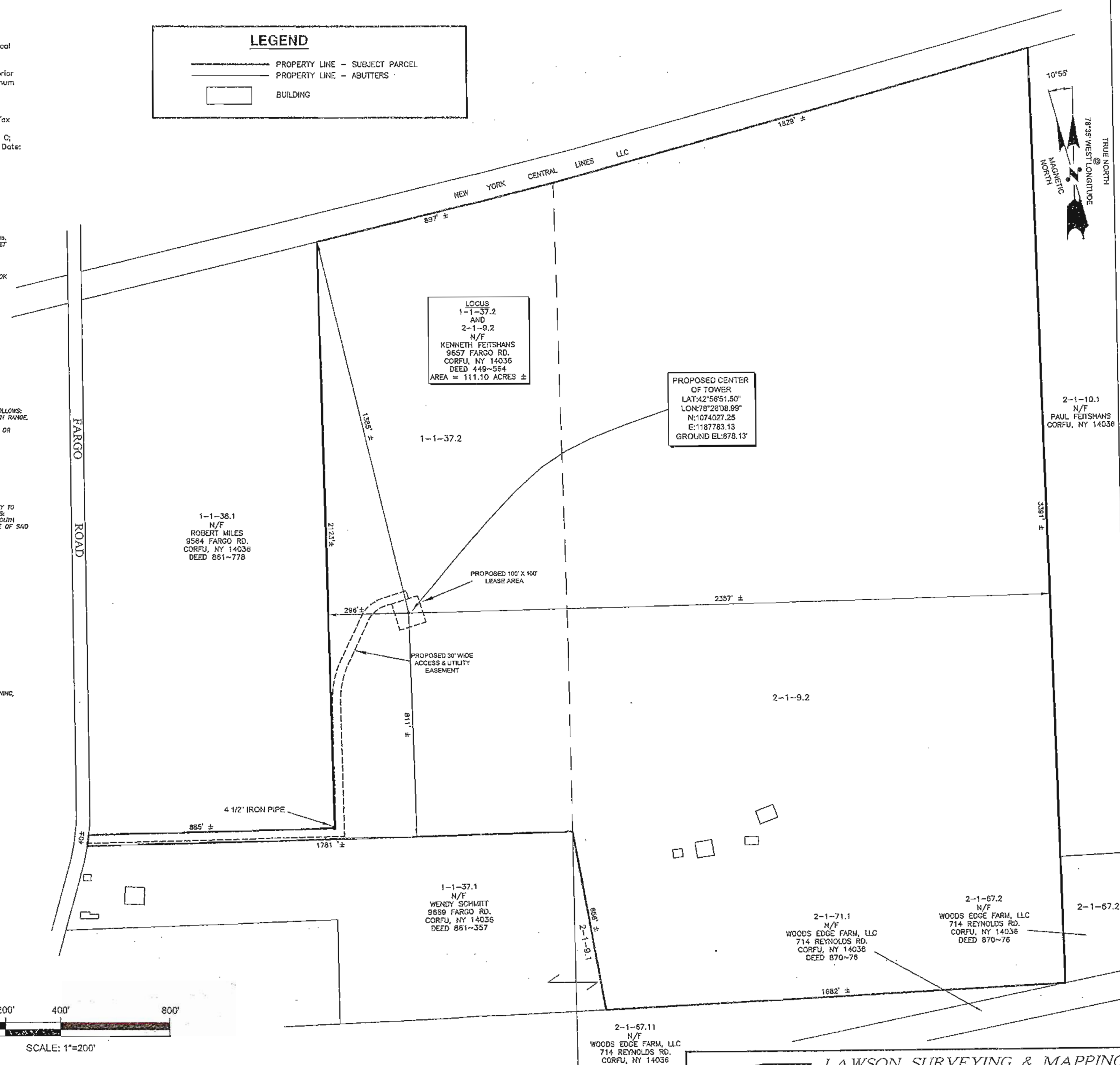

SCALE: 1"=200'

1 ABUTTERS PLAN

ZONING INFORMATION

DIMENSION REQUIREMENTS:	REQUIRED	PROPOSED±
FRONT YARD SETBACK:	50'	296'±
SIDE YARD SETBACK:	50'	1385'±, 811'±
REAR YARD SETBACK:	50'	2357'±

APPLICANT: AMERICAN TOWER SERVICES, 3500 REGENCY PARKWAY SUITE 100, CARY, NC 27518
OWNER: KENNETH FEITSHANS, 9657 FARGO ROAD, CORFU, NY 14036
ZONING DISTRICT: LOW DENSITY RESIDENTIAL (LDR)
JURISDICTION: TOWN OF DARIEN
ASSESSOR'S ID: 1–1–37.2 AND 2–1–9.2

© 2015 by Lawson Surveying & Mapping, all rights reserved.

LSM LAWSON SURVEYING & MAPPING
Boundary ~ Topographic ~ Control ~ Deformation ~ Construction ~ G.I.S. ~ Subdivision ~ G.P.S.
16 ~ 18 Reynolds Avenue ♦ Oneonta, New York 13820
Phone: (607) 432-3500
Facsimile: (607) 432-3513
www.lawsonsurvey.com

AMERICAN TOWER®
ATC TOWER SERVICES
3500 REGENCY PARKWAY
SUITE 100
CARY, NC 27518
PHONE: (919) 468-0112

PYRAMID Network Services, LLC
6519 TOWPATH ROAD
EAST SYRACUSE, NY 13057
TEL: (315) 701-1300
FAX: (315) 445-0653

Hudson Design Engineering PLLC
29 HAMM ROAD
HUSON, NY 12534
TEL: (978) 557-5553
FAX: (978) 336-5586

Copyright © 2016 ATC IP LLC, All Rights Reserve

REV.	DESCRIPTION	BY	DATE
△			
△			
△			
△			
△			

ATC SITE NUMBER:
201958
ATC SITE NAME:
ATC - CORFU A
SITE ADDRESS:
9657 FARGO ROAD
DARIEN, NY 14036

SEAL:

DRAWN BY:	JDJ
APPROVED BY:	RJL
DATE DRAWN:	11-4-2016
LSM JOB NO:	5634

ABUTTERS-PLAN

SHEET NUMBER:	REVISION:
V-101	0

FARGO ROAD

LEGEND

- PROPERTY LINE – SUBJECT PARCEL
- PROPERTY LINE – ABUTTERS
- PROPOSED EASEMENT LINE
- ZONING SETBACK LINE
- CONTOUR LINE
- WATER COURSE
- WETLANDS LINE
- WETLANDS FLAG
- UTILITY POLE
- OVERHEAD UTILITY LINES
- TREE LINE
- DECIDUOUS TREE

ACCESS AND UTILITY EASEMENT

A CERTAIN EASEMENT LOCATED EAST OF FARGO ROAD IN THE TOWN OF DARIEN, COUNTY OF GENESEE, NEW YORK, CONTAINING 57,066.357 SQUARE FEET (1.310 ACRES) MORE OR LESS OF LAND, LOCATED WITHIN LAND OF THE GRANTORS DESCRIBED IN BOOK 449 PAGE 564, SAID PARCEL IS DESCRIBED AS FOLLOWS:
BEGINNING AT THE NORTHWEST CORNER OF A LEASE AREA, RUNNING THENCE ALONG THE BOUNDS OF SAID ACCESS AND UTILITY EASEMENT,
THE FOLLOWING FIFTEEN (15) COURSES AND DISTANCES:
S 72°51'59" E A DISTANCE OF 27.57' TO A POINT;
THENCE WITH A CURVE TO THE LEFT WITH AN ARC LENGTH OF 82.53',
WITH A RADIUS OF 100.00', WITH A DELTA ANGLE OF 47°17'49", TO A POINT;
THENCE S 25°34'10" W A DISTANCE OF 165.67' TO A POINT;
THENCE WITH A CURVE TO THE LEFT WITH AN ARC LENGTH OF 156.70',
WITH A RADIUS OF 335.00', WITH A DELTA ANGLE OF 26°48'01", TO A POINT;
THENCE S 01°13'51" E A DISTANCE OF 478.78' TO A POINT;
THENCE S 88°24'27" W A DISTANCE OF 937.34' TO A POINT;
THENCE N 08°41'32" E A DISTANCE OF 30.32' TO A POINT;
THENCE N 88°24'27" E A DISTANCE OF 903.16' TO A POINT;
THENCE N 01°13'51" W A DISTANCE OF 448.87' TO A POINT;
THENCE WITH A CURVE TO THE RIGHT WITH AN ARC LENGTH OF 170.73',
WITH A RADIUS OF 365.00', WITH A DELTA ANGLE OF 26°48'01", TO A POINT;
THENCE N 25°34'10" E A DISTANCE OF 165.67' TO A POINT;
THENCE WITH A CURVE TO THE RIGHT WITH AN ARC LENGTH OF 107.31',
WITH A RADIUS OF 130.00', WITH A DELTA ANGLE OF 47°17'49", TO A POINT;
THENCE N 72°51'59" E A DISTANCE OF 92.59' TO A POINT;
THENCE S 17°08'01" E A DISTANCE OF 30.00' TO A POINT ON THE NORTHERLY LINE OF SAID LEASE AREA; THENCE N 72°51'59" E ALONG SAID LEASE AREA A DISTANCE OF 65.03' TO A POINT WHICH IS THE POINT OF BEGINNING, HAVING AN AREA OF 57,066.357 SQUARE FEET, 1.310 ACRES

1-1-38.1
N/F
ROBERT MILES
9584 FARGO RD.
CORFU, NY 14036
DEED 861-778

10°55'
7935 WEST LONGITUDE
TRUE NORTH
MAGNETIC NORTH

MATCHLINE V103
MATCHLINE V102
GRAVEL DRIVE
FIELD
PROPOSED 30' WIDE ACCESS & UTILITY EASEMENT
50' FRONT SETBACK
S 01°13'51" E 478.78'
N 01°13'51" W 448.87'
12"CPP INV =873.37
12"CPP INV =872.81

LOCUS
1-1-37.2
AND
2-1-9.2
N/F
KENNETH FEITSHANS
9857 FARGO RD.
CORFU, NY 14036
DEED 449-564
AREA = 111.10 ACRES ±

CTC-1
12"CPP INV =878.34
NG 600 83 V2.11-1
NG 96 - 72
12"CPP INV =878.74
N 08°41'32" E 30.32'
WOODED
NM 610 83 CTC 1-1
PAVED DRIVE
PROPOSED 30' WIDE ACCESS & UTILITY EASEMENT
N 88°24'27" E 903.16'
NM 620 CTC 1-2
NM 6 NG 630-83 CTC 1-3
4 1/2" IRON PIPE
NM 640-83 CTC 1-1
S 88°24'27" W 937.34'
OPEN
12"CPP INV =877.79
12"CPP INV =877.19
GRAVEL DRIVE
BUILDING
BUILDING
BUILDING

1-1-37.1
N/F
WENDY SCHMITT
9669 FARGO RD.
CORFU, NY 14036
DEED 861-357

0 40' 80' 120'
SCALE: 1"=40'

1 EXISTING CONDITIONS

© 2016 by Lawson Surveying & Mapping, all rights reserved.

LSM LAWSON SURVEYING & MAPPING
Boundary ~ Topographic ~ Control ~ Deformation ~ Construction ~ G.I.S. ~ Subdivision ~ G.P.S.
16 ~ 18 Reynolds Avenue ◊ Oneonta, New York 13820
Phone: (607) 432-3000
Facsimile: (607) 432-5213
www.lawsonsurvey.com

AMERICAN TOWER®
ATC TOWER SERVICES
3500 REGENCY PARKWAY
SUITE 100
CARY, NC 27518
PHONE: (919) 468-0112

PYRAMID Network Services, LLC
6519 TOWPATH ROAD
EAST SYRACUSE, NY 13057
TEL: (315) 701-1300
FAX: (315) 445-0653

Hudson Design Engineering PLLC
29 HAMM ROAD TEL: (978) 557-5553
HUDSON, NY 12534 FAX: (978) 336-5584

REV.	DESCRIPTION	BY	DATE

ATC SITE NUMBER:
201958

ATC SITE NAME:
ATC - CORFU A

SITE ADDRESS:
9857 FARGO ROAD
DARIEN, NY 14036

SEAL:

LAND SURVEYOR
ROBERT JAMES LAWSON
090116
STATE OF NEW YORK

DRAWN BY:	JDJ
APPROVED BY:	RJL
DATE DRAWN:	11-4-2016
LSM JOB NO:	5634

EXISTING CONDITIONS

SHEET NUMBER:	REVISION:
V-102	0

Copyright © 2016 ATC IP LLC, All Rights Reserve

LEGEND

- PROPERTY LINE – SUBJECT PARCEL
- PROPERTY LINE – ABUTTERS
- PROPOSED EASEMENT LINE
- ZONING SETBACK LINE
- CONTOUR LINE
- WATER COURSE
- WETLANDS LINE
- WETLANDS FLAG
- UTILITY POLE
- OVERHEAD UTILITY LINES
- TREE LINE
- DECIDUOUS TREE

1-1-38.1
N/F
ROBERT MILES
9564 FARGO RD.
CORFU, NY 14036
DEED 861-778

LEASE AREA

A CERTAIN LEASE AREA LOCATED EAST OF FARGO ROAD IN THE TOWN OF DARIEN, COUNTY OF GENESEE, NEW YORK, CONTAINING 10,000.00 SQUARE FEET (0.230 ACRE) MORE OR LESS OF LAND, LOCATED WITHIN LAND OF THE GRANTORS DESCRIBED IN BOOK 449 PAGE 564, SAID PARCEL IS DESCRIBED AS FOLLOWS:
BEGINNING AT THE SOUTHWEST CORNER OF A LEASE AREA HEREIN DESCRIBED; SAID POINT BEING THE FOLLOWING TWO COURSES AND DISTANCES FROM A SOUTHWEST CORNER OF THE PARENT PARCEL:
N 01°16'29"W 607.58 FEET TO A POINT; THENCE;
N 88°43'31"E 234.42 FEET TO A POINT;
THENCE ALONG THE BOUNDS OF SAID LEASE AREA THE FOLLOWING FOUR (4) COURSES AND DISTANCES;
THENCE N 72°51'59" E A DISTANCE OF 100.00' TO A POINT;
THENCE S 17°08'01" W A DISTANCE OF 100.00' TO A POINT;
THENCE S 72°51'59" W A DISTANCE OF 100.00' TO A POINT;
THENCE N 17°08'01" E A DISTANCE OF 100.00' TO A POINT;
WHICH IS THE POINT OF BEGINNING,
HAVING AN AREA OF 10,000.000 SQUARE FEET, 0.230 ACRES

ACCESS AND UTILITY EASEMENT

A CERTAIN EASEMENT LOCATED EAST OF FARGO ROAD IN THE TOWN OF DARIEN, COUNTY OF GENESEE, NEW YORK, CONTAINING 57,066.357 SQUARE FEET (1.310 ACRES) MORE OR LESS OF LAND, LOCATED WITHIN LAND OF THE GRANTORS DESCRIBED IN BOOK 449 PAGE 564. SAID PARCEL IS DESCRIBED AS FOLLOWS:
BEGINNING AT THE NORTHWEST CORNER OF A LEASE AREA, RUNNING THENCE ALONG THE BOUNDS OF SAID ACCESS AND UTILITY EASEMENT
THE FOLLOWING FIFTEEN (15) COURSES AND DISTANCES;
S 72°51'59" E A DISTANCE OF 27.57' TO A POINT;
THENCE WITH A CURVE TO THE LEFT WITH AN ARC LENGTH OF 82.55', WITH A RADIUS OF 100.00', WITH A DELTA ANGLE OF 47°17'49", TO A POINT;
THENCE S 25°34'10" W A DISTANCE OF 165.87' TO A POINT;
THENCE WITH A CURVE TO THE LEFT WITH AN ARC LENGTH OF 156.70', WITH A RADIUS OF 335.00', WITH A DELTA ANGLE OF 26°48'01", TO A POINT;
THENCE S 01°13'51" E A DISTANCE OF 479.76' TO A POINT;
THENCE S 88°24'28" W A DISTANCE OF 937.3' TO A POINT;
THENCE N 0°6'41"E A DISTANCE OF 30.32' TO A POINT;
THENCE N 88°24'28" E A DISTANCE OF 903.16' TO A POINT;
THENCE N 01°13'51" W A DISTANCE OF 449.97' TO A POINT;
THENCE WITH A CURVE TO THE RIGHT WITH AN ARC LENGTH OF 170.73', WITH A RADIUS OF 365.00', WITH A DELTA ANGLE OF 26°48'01", TO A POINT;
THENCE N 25°34'10" E A DISTANCE OF 165.87' TO A POINT;
THENCE WITH A CURVE TO THE RIGHT WITH AN ARC LENGTH OF 107.31', WITH A RADIUS OF 130.00', WITH A DELTA ANGLE OF 47°17'49", TO A POINT;
THENCE N 72°51'59" E A DISTANCE OF 92.57' TO A POINT;
THENCE S 17°08'01" E A DISTANCE OF 20.00' TO A POINT ON THE NORTHERLY LINE OF SAID LEASE AREA; THENCE N 72°51'59" E ALONG SAID LEASE AREA A DISTANCE OF 65.00' TO A POINT WHICH IS THE POINT OF BEGINNING,
HAVING AN AREA OF 57,066.357 SQUARE FEET, 1.310 ACRES

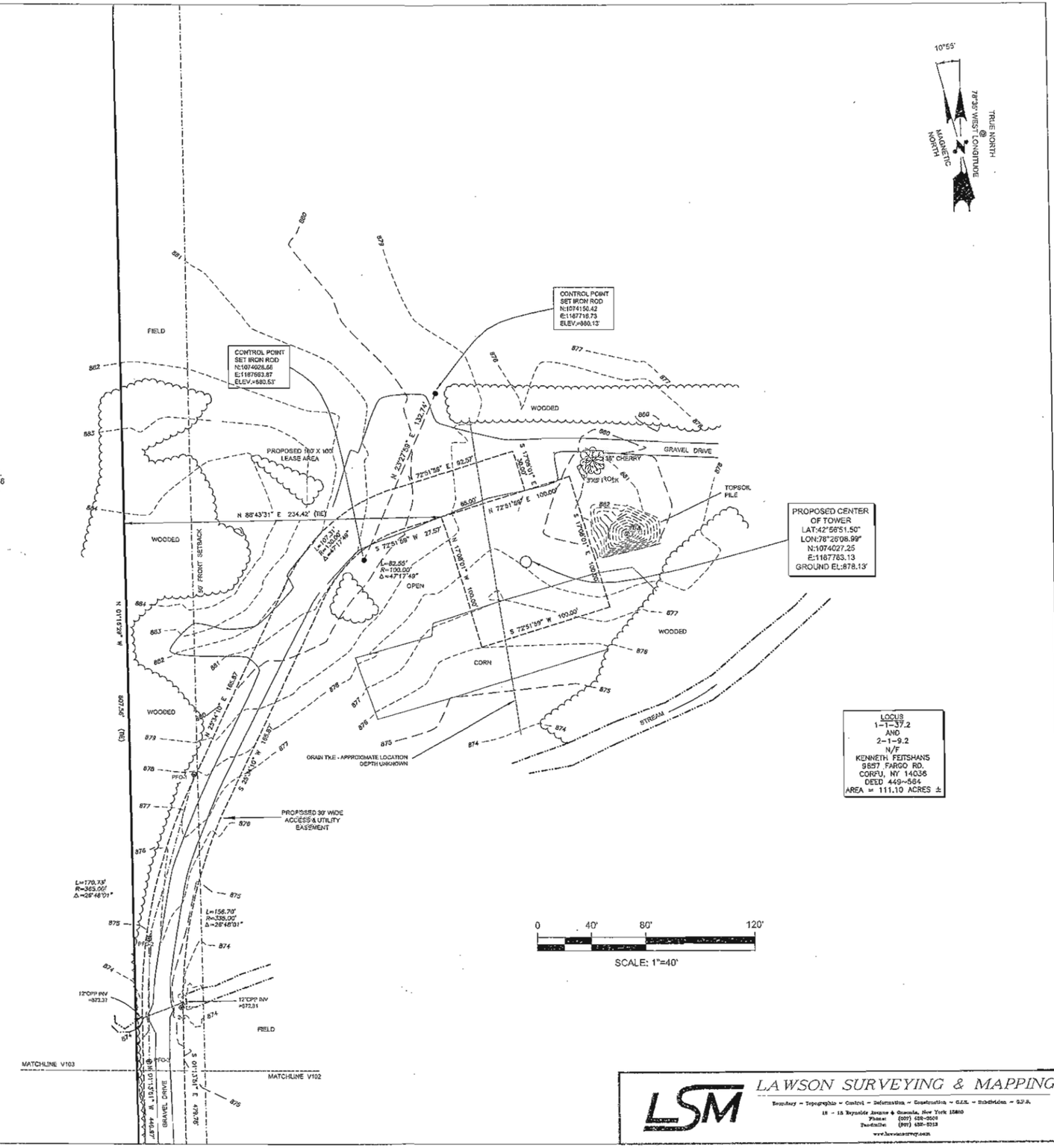

2 EXISTING CONDITIONS

© 2016 by Lawson Surveying & Mapping, all rights reserved.

Copyright © 2016 ATC IP LLC, All Rights Reserve

AMERICAN TOWER®
ATC TOWER SERVICES
3500 REGENCY PARKWAY
SUITE 100
CARY, NC 27518
PHONE: (919) 468-0112

PYRAMID Network Services, LLC
6519 TOWPATH ROAD
EAST SYRACUSE, NY 13057
TEL: (315) 701-1300
FAX: (315) 445-0653

Hudson Design Engineering PLLC
29 HAMM ROAD TEL: (978) 557-5553
HUDSON, NY 12534 FAX: (978) 336-5586

REV.	DESCRIPTION	BY	DATE

ATC SITE NUMBER:
201958

ATC SITE NAME:
ATC - CORFU A

SITE ADDRESS:
9657 FARGO ROAD
DARIEN, NY 14036

SEAL:

LAND SURVEYOR
ROBERT J. LAWSON
No. 049901
STATE OF NEW YORK

DRAWN BY:	JDJ
APPROVED BY:	RJL
DATE DRAWN:	11-4-2016
LSM JOB NO:	5634

EXISTING CONDITIONS

SHEET NUMBER:	REVISION:
V-103	0

LSM LAWSON SURVEYING & MAPPING
Boundary ~ Topographic ~ Control ~ Deformation ~ Construction ~ G.I.S. ~ Subdivision ~ S.P.A.
18 - 18 Reynolds Avenue ◆ Oneonta, New York 13820
Phone: (607) 432-0609
Facsimile: (607) 432-0913
www.lawsonsurvey.com

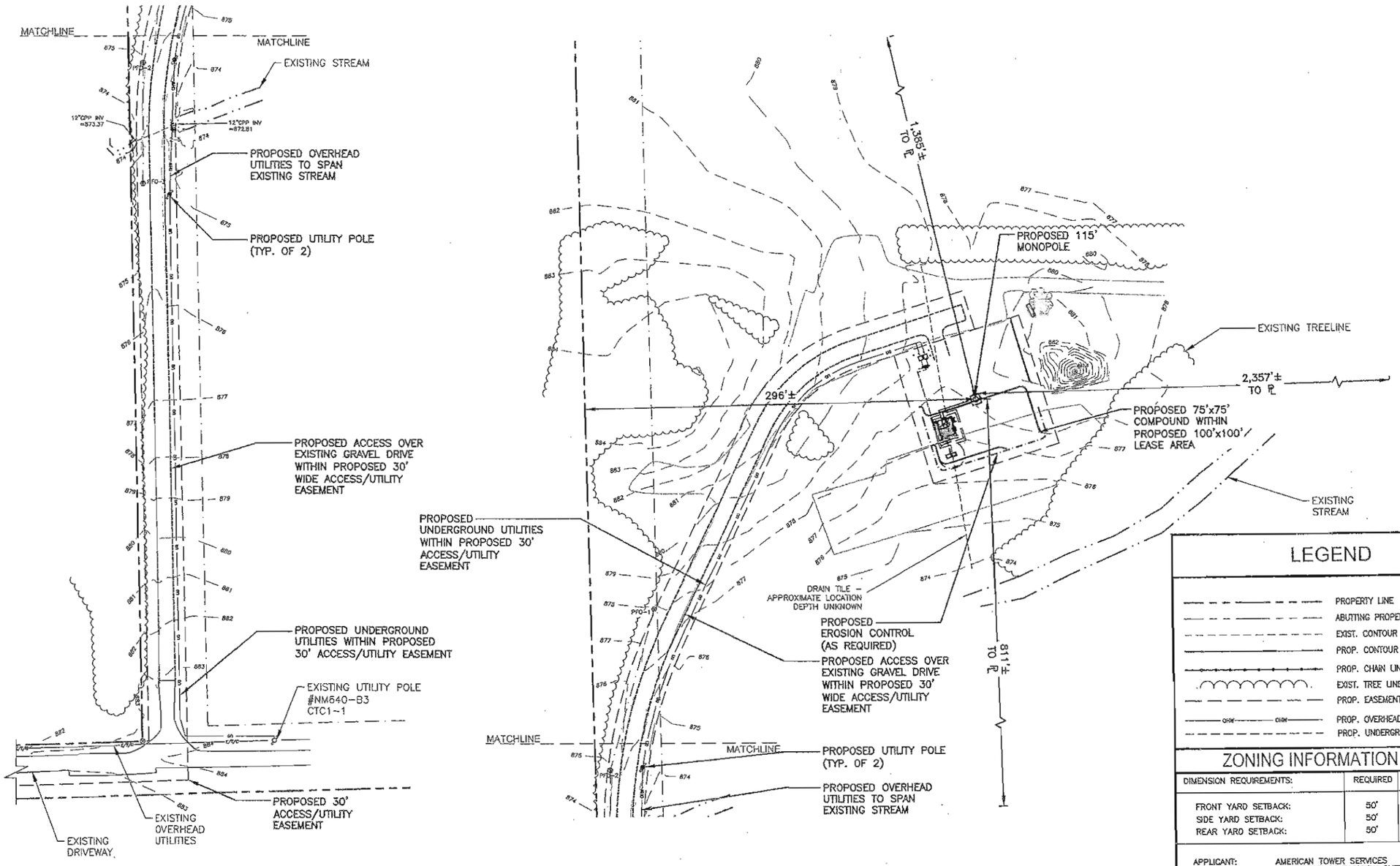

SITE PLAN (1 / C-1)
22x34 SCALE: 1"=40'
11x17 SCALE: 1"=80'

0 20 40 80 120

10°55'
MAGNETIC NORTH
TRUE NORTH

LEGEND

- PROPERTY LINE
- ABUTTING PROPERTY LINE
- EXIST. CONTOUR LINE
- PROP. CONTOUR LINE
- PROP. CHAIN LINK FENCE
- EXIST. TREE LINE
- PROP. EASEMENT
- OHU — OHU — PROP. OVERHEAD UTILITIES
- PROP. UNDERGROUND UTILITIES

ZONING INFORMATION

DIMENSION REQUIREMENTS:	REQUIRED	PROPOSED TOWER
FRONT YARD SETBACK:	50'	296'±
SIDE YARD SETBACK:	50'	1385'± & 811'±
REAR YARD SETBACK:	50'	2357'±

APPLICANT:	AMERICAN TOWER SERVICES 3500 REGENCY PARKWAY SUITE 100 CARY, NC 27518
OWNER:	KENNETH FEITSHANS 9657 FARGO ROAD CORFU, NY 14036
ZONING DISTRICT:	LOW DENSITY RESIDENTIAL (LDR)
JURISDICTION:	TOWN OF DARIEN
ASSESSOR'S ID:	1-1-37.2 AND 2-1-9.2

SOURCE:

PLAN TITLED: "EXISTING CONDITIONS"
DATED 8-XX-2016
PREPARED BY: LAWSON SURVEYING & MAPPING

AMERICAN TOWER CORPORATION
116 HUNTINGTON AVE. 11TH FLOOR
BOSTON, MA 02116

CELLCO PARTNERSHIP D.B.A.
verizon

Hudson Design Engineering PLLC
29 HAMM ROAD
HUDSON, NY 12534
TEL: (978) 557-5553
FAX: (978) 336-5586

STATE OF NEW YORK
DEREK J. CREASER
084307-A
LICENSED PROFESSIONAL ENGINEER

CHECKED BY: AT
APPROVED BY: DJC

SUBMITTALS

REV.	DATE	DESCRIPTION	BY
5	11/29/17	REVISED FOR PERMITTING	SB
4	09/31/17	REVISED FOR PERMITTING	SB
3	07/17/17	REVISED FOR PERMITTING	SB
2	06/20/17	REVISED FOR PERMITTING	SB
1	04/27/17	ISSUED FOR PERMITTING	EB
0	04/18/17	ISSUED FOR REVIEW	SB

ATC SITE NUMBER:
201958
SITE NAME:
CORFU

SITE ADDRESS:
9657 FARGO ROAD
DARIEN, NY 14036
GENESEE COUNTY

SHEET TITLE
SITE PLAN

SHEET NUMBER
C-1

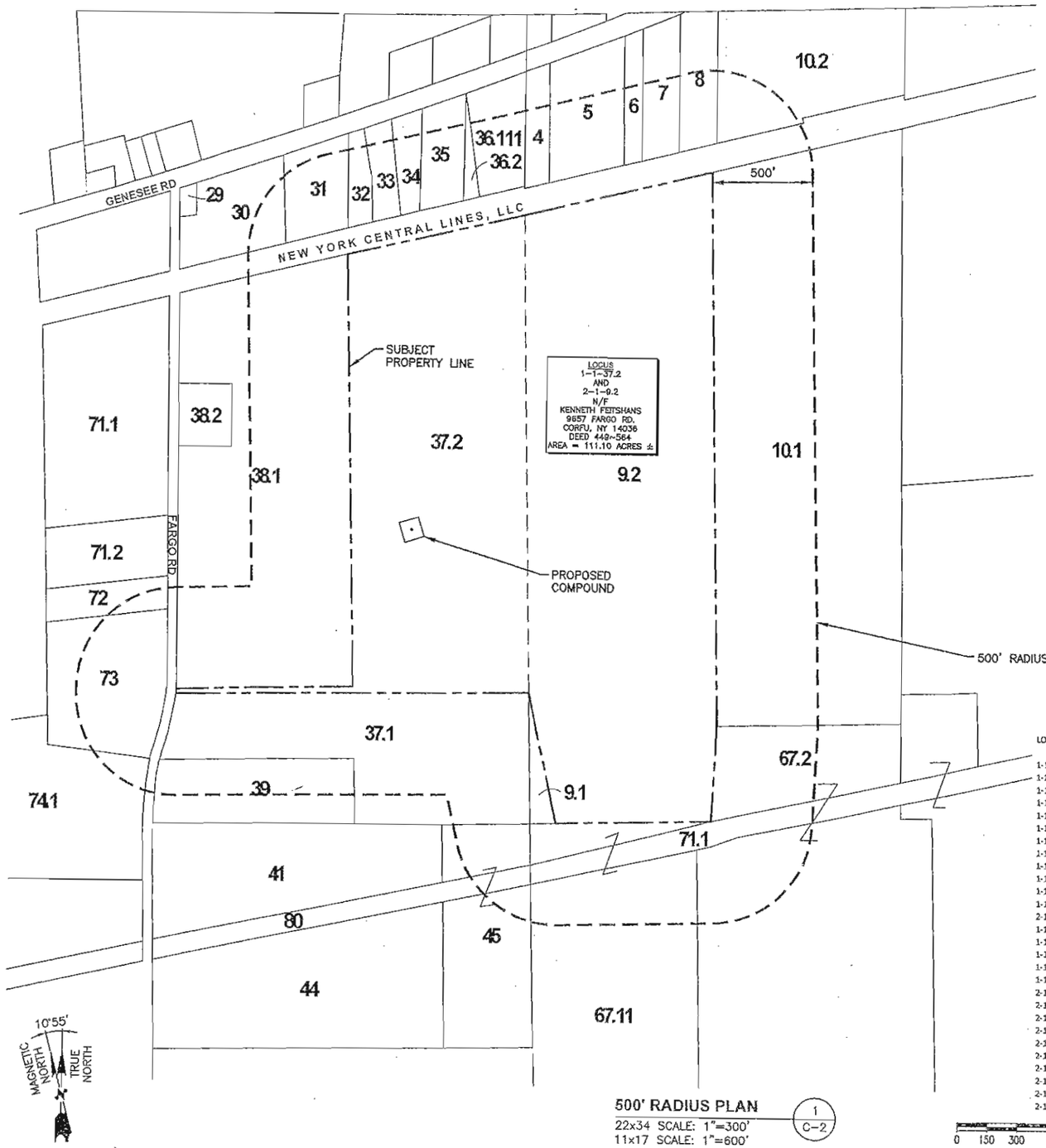

500' RADIUS PLAN
22x34 SCALE: 1"=300'
11x17 SCALE: 1"=600'
1 / C-2

0 150 300 600 900

500' ABUTTERS LIST

LOT	OWNER	PROPERTY ADDRESS	MAILING ADDRESS
1-1-30	DAVID W. WELLS	622 GENESEE ROAD CORFU, NY 14036	SAME
1-1-31	LUCAS J. HOFFARTH	636 GENESEE ROAD CORFU, NY 14036	SAME
1-1-32	PATRICK J. SONNENFELD	648 GENESEE ROAD CORFU, NY 14036	SAME
1-1-33	MARY ANN CORNELIUS	651 GENESEE ROAD CORFU, NY 14036	SAME
1-1-34	BERNARD & LINDA L. FIX	662 GENESEE ROAD CORFU, NY 14036	SAME
1-1-35	LEE A HARE	672 GENESEE ROAD CORFU, NY 14036	SAME
1-1-36.2	LEE A HARE	672 GENESEE ROAD CORFU, NY 14036	SAME
1-1-36.111	RICHARD D. & DIANE B. BURGER	678 GENESEE ROAD CORFU, NY 14036	SAME
1-1-72	CHRISTOPHER KOEPH	9632 FARGO ROAD	1561 BOWEN RD ELMA, NY 14059
1-1-73	ANTHONY D. MATUSZEWSKI	9640 FARGO ROAD DARIEN CENTER, NY 14036	SAME
1-1-74.1	CONNIE ZIMICKI	9694 FARGO ROAD CORFU, NY 14036	SAME
1-1-37.1	WENDY SCHMITT	9669 DARGO ROAD CORFU, NY 14036	SAME
2-1-9.1	WENDY SCHMITT	9669 DARGO ROAD CORFU, NY 14036	SAME
1-1-39	CINDY WILLIAMS	9677 FARGO ROAD CORFU, NY 14036	SAME
1-1-41	SANDRA MAURER	FARGO ROAD	618 SCRIBNER RD CORFU, NY 14036
1-1-45	WOODS EDGE FARMS, LLC	FARGO ROAD	714 REYNOLDS ROAD CORFU, NY 14036
1-1-38.1	ROBERT MILES	9564 FARGO ROAD CORFU, NY 14036	SAME
1-1-80	WOODS EDGE FARMS, LLC	FARGO ROAD	714 REYNOLDS ROAD CORFU, NY 14036
2-1-67.11	WOODS EDGE FARMS, LLC	714 REYNOLDS ROAD CORFU, NY 14036	SAME
2-1-71.1	WOODS EDGE FARMS, LLC	FARGO ROAD	714 REYNOLDS ROAD CORFU, NY 14036
2-1-67.2	WOODS EDGE FARMS, LLC	817 REYNOLDS RD	714 REYNOLDS ROAD CORFU, NY 14036
2-1-10.1	PAUL FEITSHANS	FARGO ROAD	9657 FARGO ROAD CORFU, NY 14036
2-1-4	DONALD & BONNIE SCHAD	GENESEE ROAD	12345 WESTWOOD RD ALDEN, NY 14004
2-1-5	DAVID R. ALVORD	GENESEE ROAD	8850 WORTENDYKE RD BATAVIA, NY 14020
2-1-6	STANLEY GLOWNY	GENESEE ROAD	48 ROLLING HILLS DR ORCHARD PARK, NY 14027
2-1-7	DOROTHY E. HANSON	726 W. GENESEE ROAD CORFU, NY 01436	SAME
2-1-8	FATIMA UMAR & ZAYABA UZAYR YASIN	GENESEE ROAD	19 LILLY RIDGE DR EAST AMHERST, NY 14051
2-1-10.2	MARK S. SZPARA	GENESEE ROAD	12317 NICE RD AKRON, NY 14001

AMERICAN TOWER CORPORATION
116 HUNTINGTON AVE. 11TH FLOOR
BOSTON, MA 02116

CELLCO PARTNERSHIP D.B.A.
verizon

Hudson Design Engineering PLLC
29 HAMM ROAD
HUDSON, NY 12534
TEL: (978) 557-5553
FAX: (978) 336-5986

STATE OF NEW YORK
DEREK J. CREASER
LICENSED PROFESSIONAL ENGINEER
094307-1

CHECKED BY: AT

APPROVED BY: DJC

SUBMITTALS

REV.	DATE	DESCRIPTION	BY
5	11/29/17	REVISED FOR PERMITTING	SB
4	08/31/17	REVISED FOR PERMITTING	SB
3	07/17/17	REVISED FOR PERMITTING	SB
2	06/20/17	REVISED FOR PERMITTING	SB
1	04/27/17	ISSUED FOR PERMITTING	EB
0	04/18/17	ISSUED FOR REVIEW	SB

ATC SITE NUMBER:
201958
SITE NAME:
CORFU

SITE ADDRESS:
9657 FARGO ROAD
DARIEN, NY 14036
GENESEE COUNTY

SHEET TITLE
500' RADIUS PLAN

SHEET NUMBER
C-2

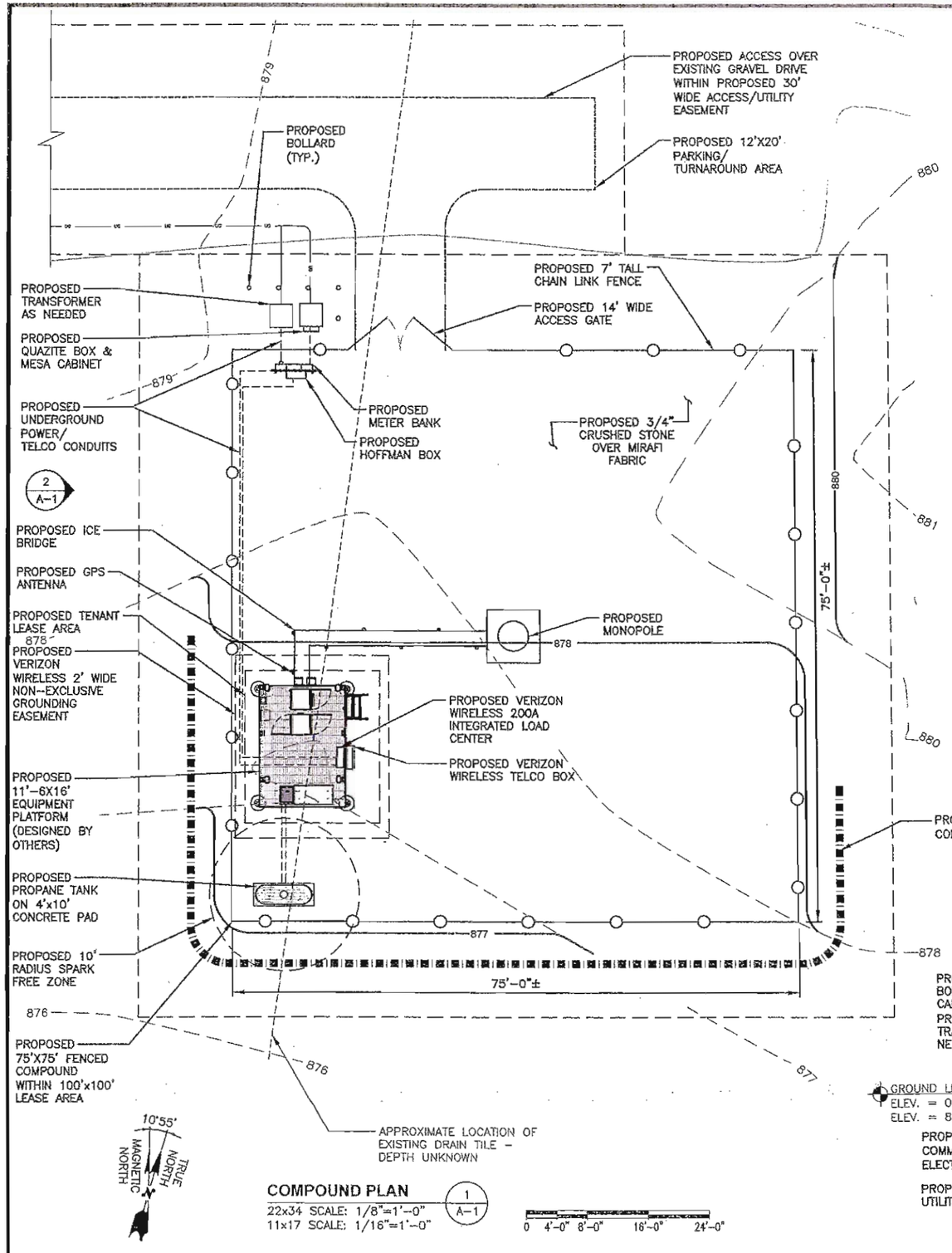

COMPOUND PLAN (1 / A-1)
22x34 SCALE: 1/8"=1'-0"
11x17 SCALE: 1/16"=1'-0"

0 4'-0" 8'-0" 16'-0" 24'-0"

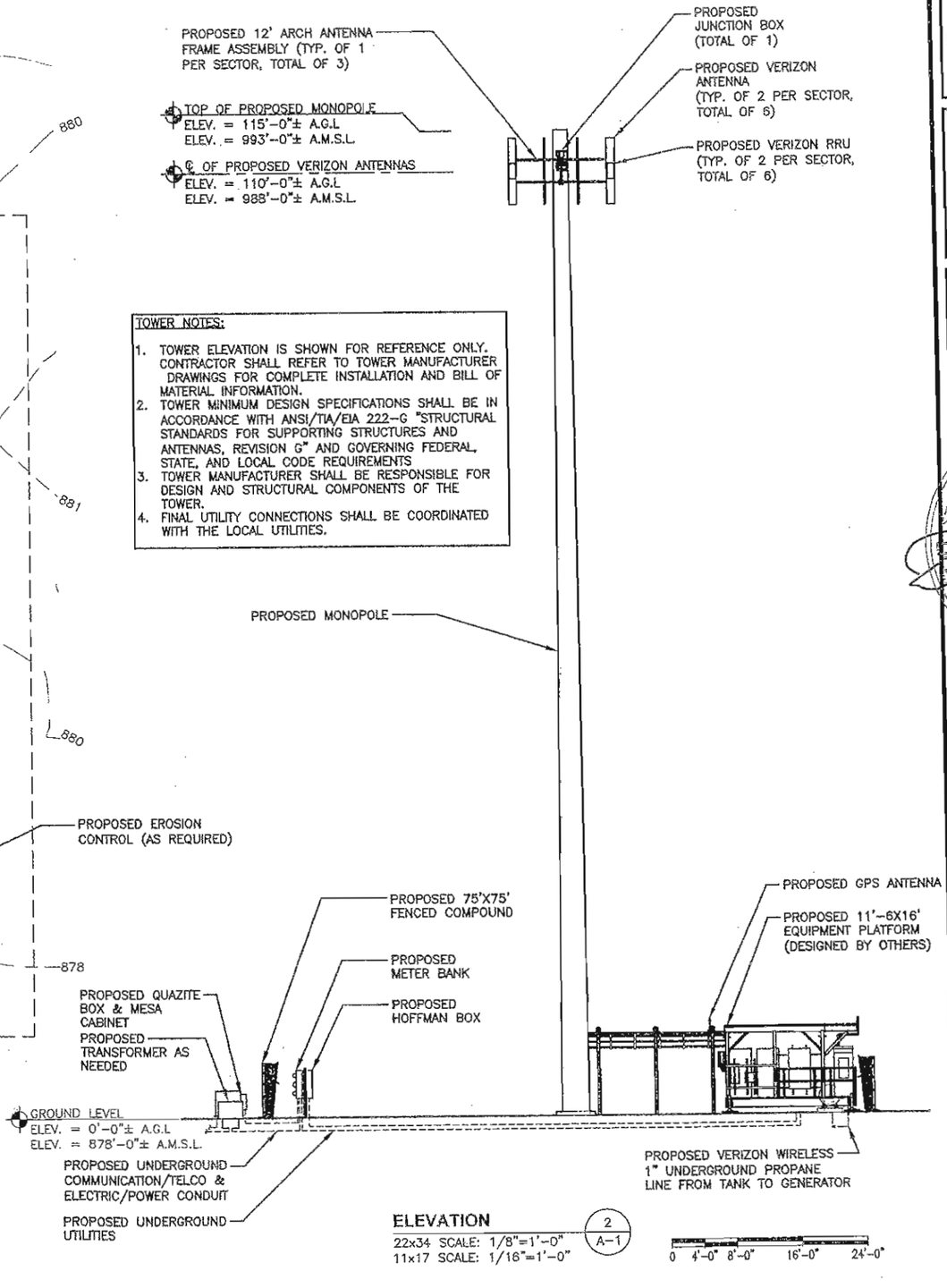

ELEVATION (2 / A-1)
22x34 SCALE: 1/8"=1'-0"
11x17 SCALE: 1/16"=1'-0"

0 4'-0" 8'-0" 16'-0" 24'-0"

TOWER NOTES:

1. TOWER ELEVATION IS SHOWN FOR REFERENCE ONLY. CONTRACTOR SHALL REFER TO TOWER MANUFACTURER DRAWINGS FOR COMPLETE INSTALLATION AND BILL OF MATERIAL INFORMATION.
2. TOWER MINIMUM DESIGN SPECIFICATIONS SHALL BE IN ACCORDANCE WITH ANSI/TIA/EIA 222-G "STRUCTURAL STANDARDS FOR SUPPORTING STRUCTURES AND ANTENNAS, REVISION G" AND GOVERNING FEDERAL, STATE, AND LOCAL CODE REQUIREMENTS
3. TOWER MANUFACTURER SHALL BE RESPONSIBLE FOR DESIGN AND STRUCTURAL COMPONENTS OF THE TOWER.
4. FINAL UTILITY CONNECTIONS SHALL BE COORDINATED WITH THE LOCAL UTILITIES.

AMERICAN TOWER CORPORATION
116 HUNTINGTON AVE. 11TH FLOOR
BOSTON, MA 02116

CELLCO PARTNERSHIP D.B.A.
verizon

Hudson Design Engineering PLLC
29 HAMM ROAD
HUDSON, NY 12534
TEL: (978) 557-5553
FAX: (978) 336-5586

STATE OF NEW YORK
DEREK J. CREASER
094307
LICENSED PROFESSIONAL ENGINEER

CHECKED BY: AT

APPROVED BY: DJC

SUBMITTALS

REV.	DATE	DESCRIPTION	BY
5	11/28/17	REVISED FOR PERMITTING	SB
4	08/31/17	REVISED FOR PERMITTING	SB
3	07/17/17	REVISED FOR PERMITTING	SB
2	06/20/17	REVISED FOR PERMITTING	SB
1	04/27/17	ISSUED FOR PERMITTING	EB
0	04/18/17	ISSUED FOR REVIEW	SB

ATC SITE NUMBER:
201958
SITE NAME:
CORFU

SITE ADDRESS:
9657 FARGO ROAD
DARIEN, NY 14036
GENESEE COUNTY

SHEET TITLE
COMPOUND PLAN & ELEVATION

SHEET NUMBER
A-1

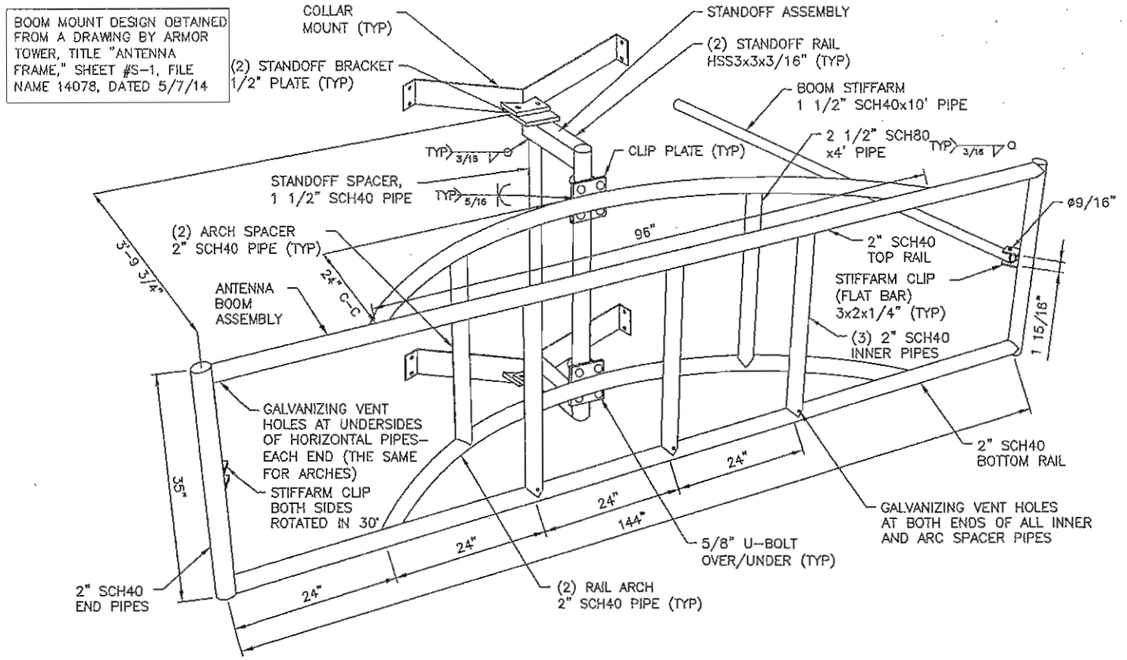

BOOM MOUNT DETAIL
SCALE: N.T.S
1 A-2

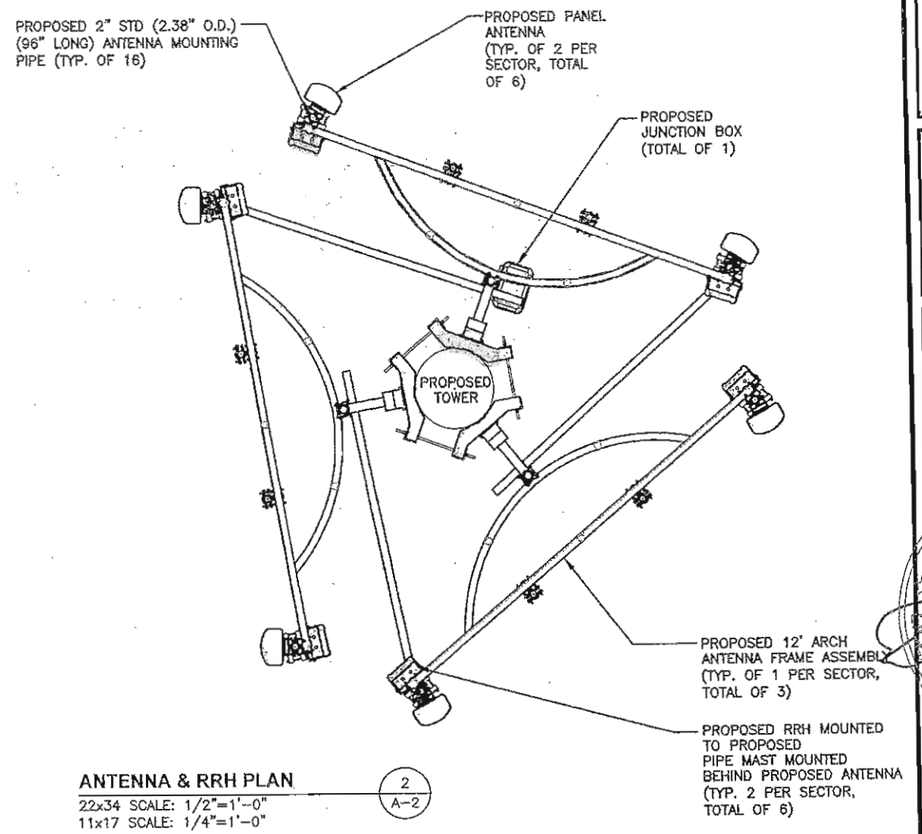

ANTENNA & RRH PLAN
22x34 SCALE: 1/2"=1'-0"
11x17 SCALE: 1/4"=1'-0"
2 A-2

0 16'-0" 32'-0" 64'-0" 96'-0"

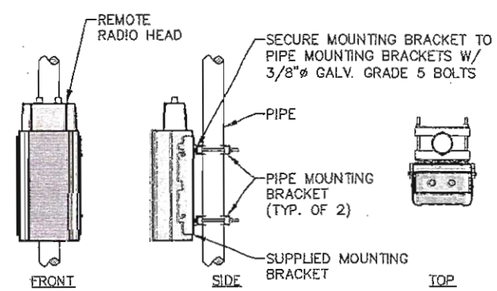

REMOTE RADIO HEAD
SCALE: N.T.S
3 A-2

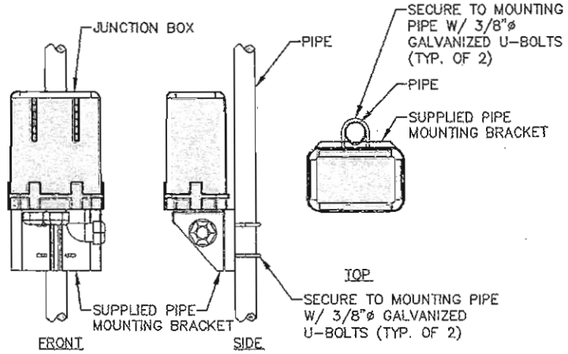

JUNCTION BOX
SCALE: N.T.S
4 A-2

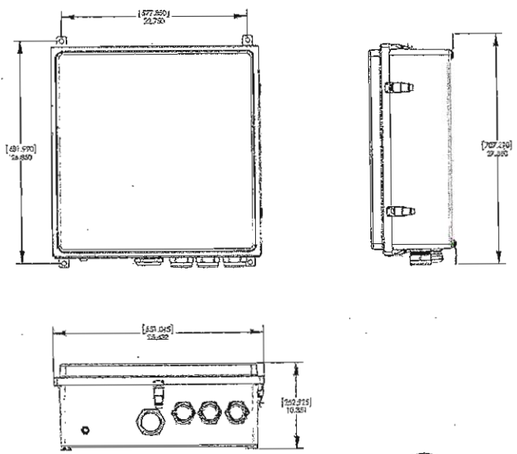

RAYCAP JUNCTION BOX
SCALE: N.T.S
5 A-2

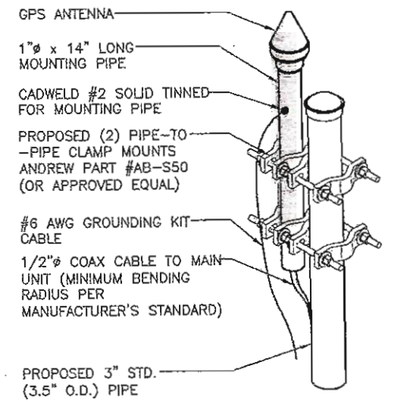

GPS ANTENNA MOUNTING DETAIL
SCALE: N.T.S
6 A-2

AMERICAN TOWER CORPORATION
116 HUNTINGTON AVE. 11TH FLOOR
BOSTON, MA 02116

CELLCO PARTNERSHIP D.B.A.
verizon

Hudson Design Engineering PLLC
29 HAMM ROAD
HUDSON, NY 12534
TEL: (978) 557-5553
FAX: (978) 336-5586

STATE OF NEW YORK
DEREK J. CREASER
084307-1
LICENSED PROFESSIONAL ENGINEER

CHECKED BY: AT
APPROVED BY: DJC

SUBMITTALS

REV.	DATE	DESCRIPTION	BY
5	11/29/17	REVISED FOR PERMITTING	SB
4	08/31/17	REVISED FOR PERMITTING	SB
3	07/17/17	REVISED FOR PERMITTING	SB
2	06/20/17	REVISED FOR PERMITTING	SB
1	04/27/17	ISSUED FOR PERMITTING	EB
0	04/18/17	ISSUED FOR REVIEW	SB

ATC SITE NUMBER:
201958
SITE NAME:
CORFU

SITE ADDRESS:
9657 FARGO ROAD
DARIEN, NY 14036
GENESEE COUNTY

SHEET TITLE
ANTENNA PLAN & DETAILS

SHEET NUMBER
A-2

FENCE NOTES

1. ALTERNATE FOOTINGS FOR ALL FENCE POSTS IN LEDGE: IF LEDGE IS ENCOUNTERED AT GRADE, OR AT A DEPTH SHALLOWER THAN 3'-6", CORE DRILL AN 8" DIA HOLE 18" INTO THE LEDGE. CENTER POST IN THE HOLE AND FILL WITH CONCRETE OR GROUT. IF LEDGE IS BELOW FINISH GRADE, COAT BACKFILLED SECTION OF POST WITH COAL TAR, AND BACKFILL WITH WELL-DRAINING GRAVEL.

2. ATTACH EACH GATE WITH 1-1/2 PAIR OF NON-LIFT-OFF TYPE, MALLEABLE IRON OR FORGING, PIN-TYPE HINGES. ASSEMBLIES SHALL ALLOW FOR 180° OF GATE TRAVEL.

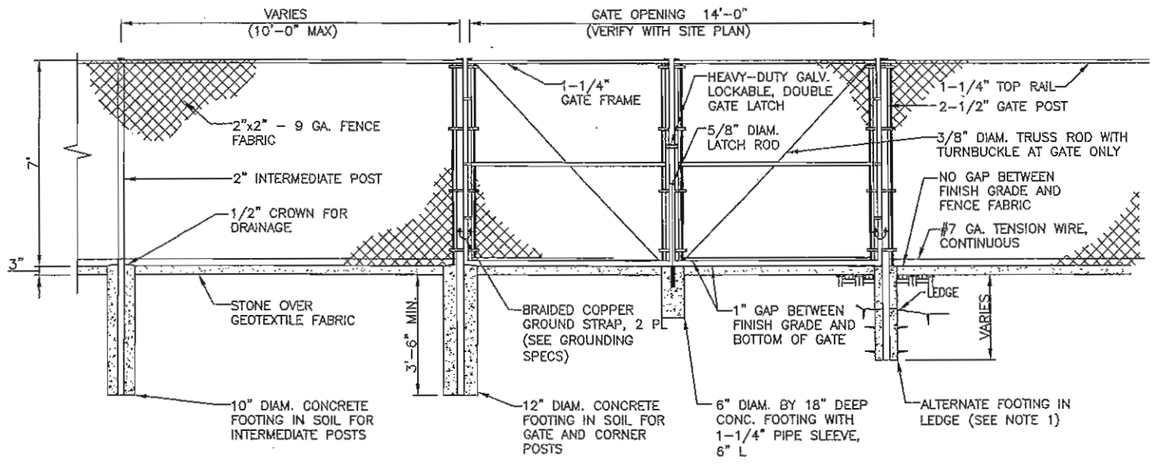

CHAIN LINK FENCE DETAIL 1 / A-3
SCALE: N.T.S

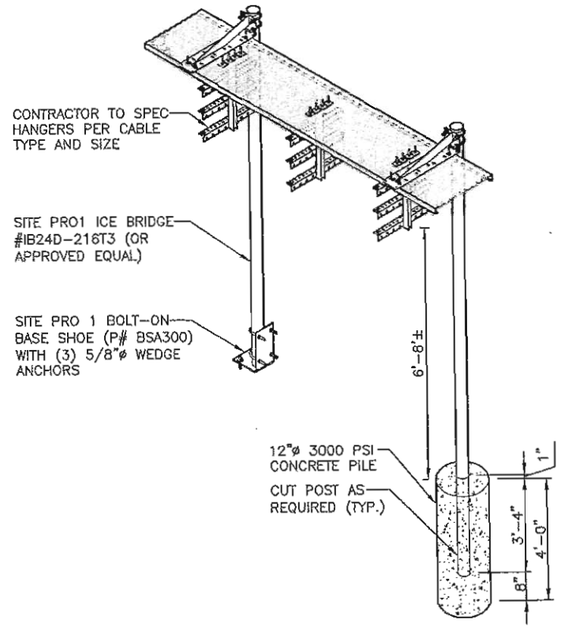

CABLE BRIDGE DETAIL 2 / A-3
22x34 SCALE: N.T.S

AMERICAN TOWER CORPORATION
116 HUNTINGTON AVE. 11TH FLOOR
BOSTON, MA 02116

CELLCO PARTNERSHIP D.B.A.
verizon

Hudson Design Engineering PLLC
29 HAMM ROAD
HUDSON, NY 12534
TEL: (978) 557-5553
FAX: (978) 336-5586

STATE OF NEW YORK
DEREK J. CREASER
D094307-1
LICENSED PROFESSIONAL ENGINEER

CHECKED BY: AT

APPROVED BY: DJC

SUBMITTALS

REV.	DATE	DESCRIPTION	BY
5	11/29/17	REVISED FOR PERMITTING	SB
4	08/31/17	REVISED FOR PERMITTING	SB
3	07/17/17	REVISED FOR PERMITTING	SB
2	06/20/17	REVISED FOR PERMITTING	SB
1	04/27/17	ISSUED FOR PERMITTING	EB
0	04/18/17	ISSUED FOR REVIEW	SB

ATC SITE NUMBER:
201958
SITE NAME:
CORFU

SITE ADDRESS:
9657 FARGO ROAD
DARIEN, NY 14036
GENESEE COUNTY

SHEET TITLE
EQUIPMENT DETAILS

SHEET NUMBER
A-3

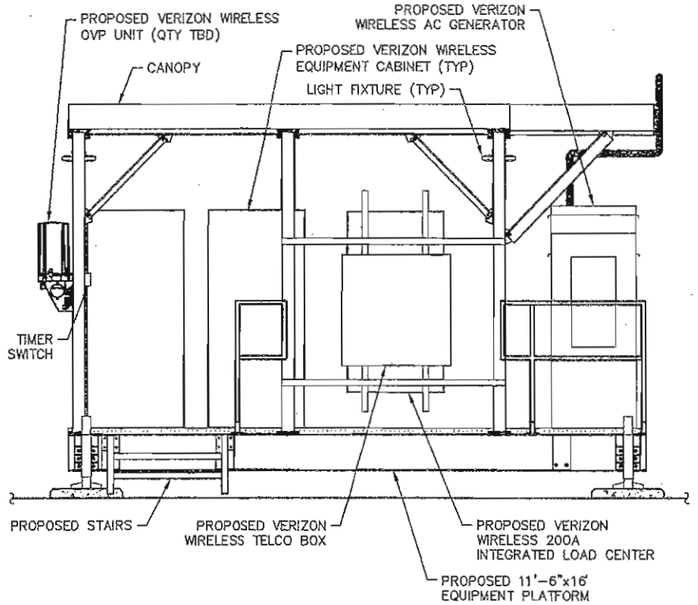

FRONT ELEVATION (1/A-4)
SCALE: N.T.S

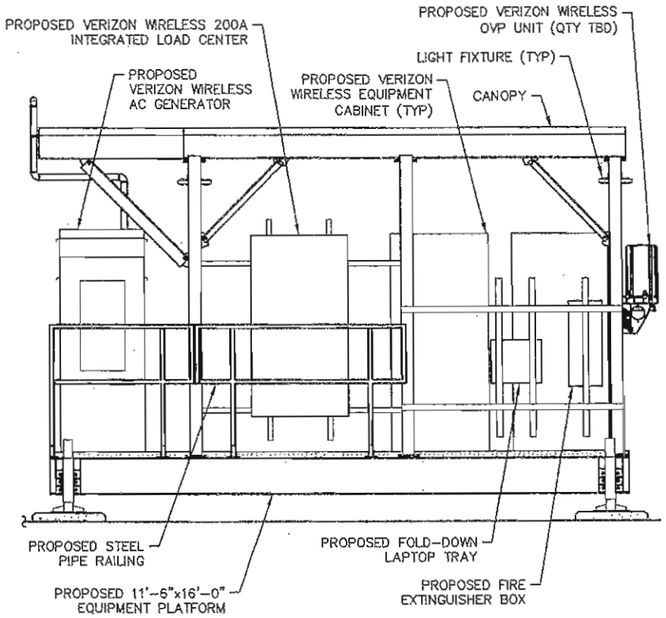

REAR ELEVATION (2/A-4)
SCALE: N.T.S

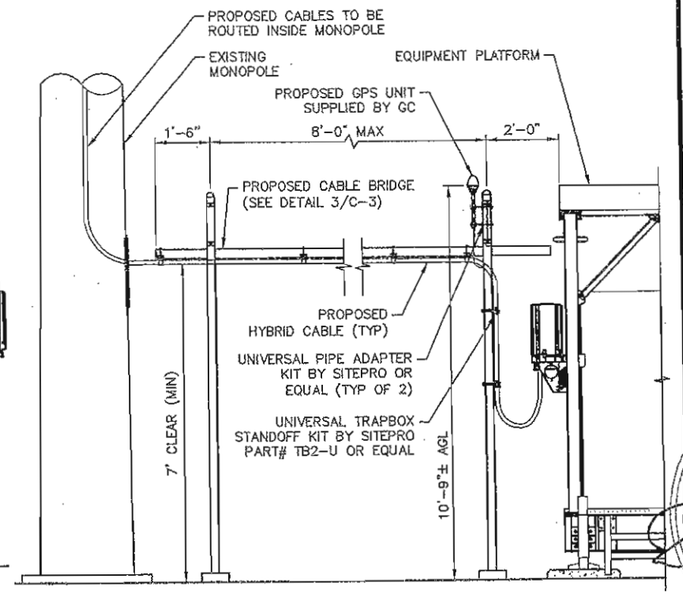

EQUIPMENT ELEVATION (3/A-4)
SCALE: N.T.S

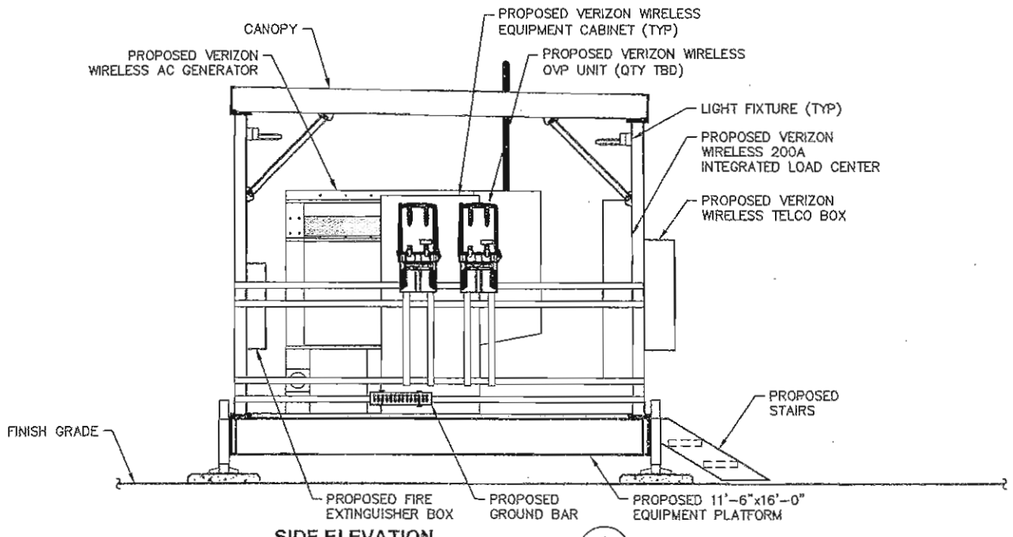

SIDE ELEVATION (4/A-4)
SCALE: N.T.S

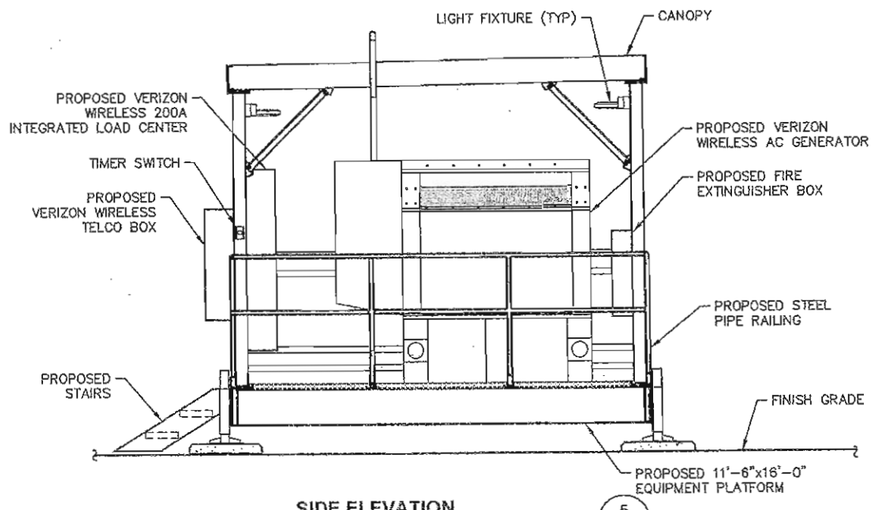

SIDE ELEVATION (5/A-4)
SCALE: N.T.S

AMERICAN TOWER CORPORATION
116 HUNTINGTON AVE. 11TH FLOOR
BOSTON, MA 02116

CELLCO PARTNERSHIP D.B.A.
verizon

Hudson Design Engineering LLC
29 HAMM ROAD
HUDSON, NY 12534
TEL: (978) 557-5553
FAX: (978) 336-5586

STATE OF NEW YORK
DEREK J. CREASER
D96307-1
LICENSED PROFESSIONAL ENGINEER

CHECKED BY: AT

APPROVED BY: DJC

SUBMITTALS

REV.	DATE	DESCRIPTION	BY
5	11/29/17	REVISED FOR PERMITTING	SB
4	09/31/17	REVISED FOR PERMITTING	SB
3	07/17/17	REVISED FOR PERMITTING	SB
2	06/20/17	REVISED FOR PERMITTING	SB
1	04/27/17	ISSUED FOR PERMITTING	EB
0	04/18/17	ISSUED FOR REVIEW	SB

ATC SITE NUMBER:
201958
SITE NAME:
CORFU

SITE ADDRESS:
9657 FARGO ROAD
DARIEN, NY 14036
GENESEE COUNTY

SHEET TITLE
PLATFORM & EQUIPMENT DETAILS

SHEET NUMBER
A-4

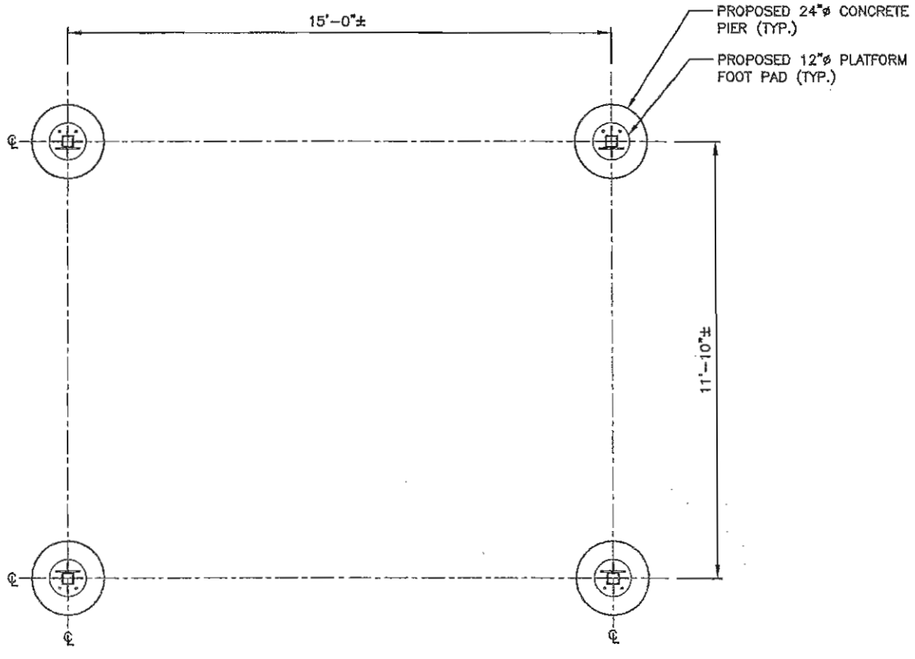

CONCRETE PIER LAYOUT PLAN (1 / A-5)
SCALE: N.T.S

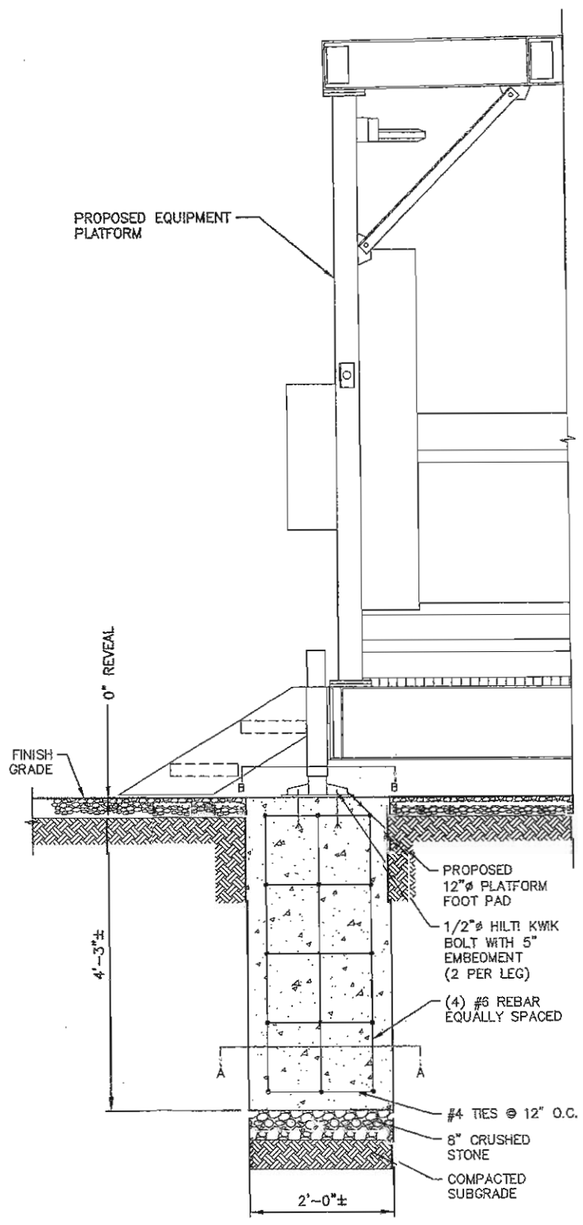

CONCRETE PIER DETAIL (2 / A-5)
SCALE: N.T.S

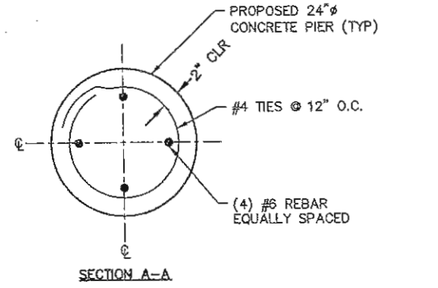

SECTION A-A

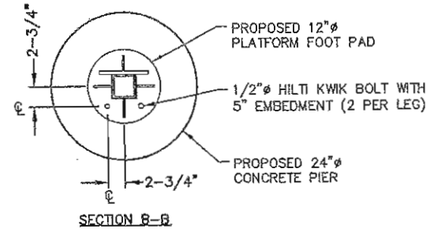

SECTION B-B

AMERICAN TOWER CORPORATION
116 HUNTINGTON AVE. 11TH FLOOR
BOSTON, MA 02116

CELLCO PARTNERSHIP D.B.A.
verizon

Hudson Design Engineering PLLC
29 HAMM ROAD
HUDSON, NY 12534
TEL: (978) 557-5553
FAX: (978) 336-5586

STATE OF NEW YORK
JEREK J. CREASER
084307
LICENSED PROFESSIONAL ENGINEER

CHECKED BY: AT

APPROVED BY: DJC

SUBMITTALS

REV.	DATE	DESCRIPTION	BY
5	11/29/17	REVISED FOR PERMITTING	SB
4	08/31/17	REVISED FOR PERMITTING	SB
3	07/17/17	REVISED FOR PERMITTING	SB
2	06/20/17	REVISED FOR PERMITTING	SB
1	04/27/17	ISSUED FOR PERMITTING	EB
0	04/18/17	ISSUED FOR REVIEW	SB

ATC SITE NUMBER:
201958
SITE NAME:
CORFU

SITE ADDRESS:
9657 FARGO ROAD
DARIEN, NY 14036
GENESEE COUNTY

SHEET TITLE
PLATFORM FOUNDATION DETAILS

SHEET NUMBER
A-5

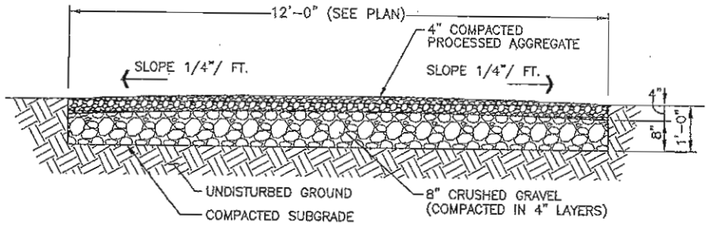

GRAVEL ACCESS DRIVE (1 / A-6)
SCALE: N.T.S

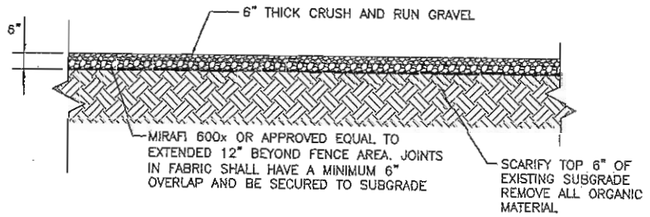

GRAVEL COMPOUND DETAIL (2 / A-6)
SCALE: N.T.S

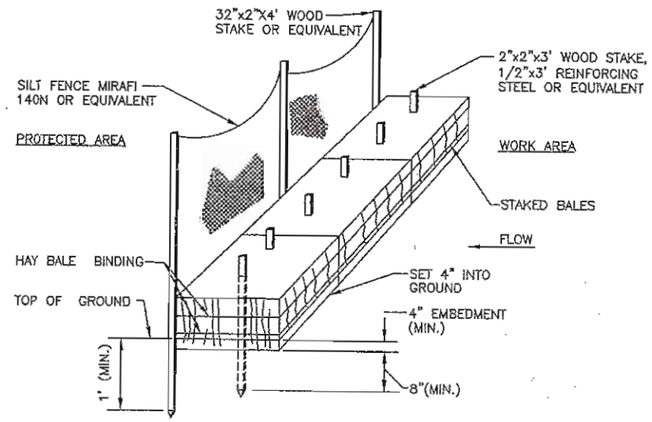

EROSION CONTROL DETAIL (3 / A-6)
SCALE: N.T.S

GENERAL CONSTRUCTION SEQUENCE:

THIS IS A GENERAL CONSTRUCTION SEQUENCE OUTLINE SOME ITEMS OF WHICH MAY NOT APPLY TO PARTICULAR SITES.

1) CLEAR AND GRUB AREAS OF PROPOSED CONSTRUCTION.
2) INSTALL TEMPORARY SEDIMENT AND EROSION CONTROL MEASURES AS REQUIRED.
3) REMOVE AND STOCKPILE TOPSOIL. STOCKPILE SHALL BE SEEDED TO PREVENT EROSION.
4) CONSTRUCT CLOSED DRAINAGE SWALES. PROTECT OUTLETS WITH SEDIMENTATION BARRIERS.
5) CONSTRUCT ROADWAYS AND PERFORM SITE GRADING, PLACING HAY BALES AND SILTATION FENCES AS REQUIRED TO CONTROL SOIL EROSION.
6) BEGIN TEMPORARY AND PERMANENT SEEDING AND MULCHING. ALL CUT AND FILL SLOPES SHALL BE SEEDED OR MULCHED IMMEDIATELY AFTER THEIR CONSTRUCTION. NO AREA SHALL BE LEFT UNSTABILIZED FOR A TIME PERIOD OF MORE THAN 15 DAYS.
7) DAILY, OR AS REQUIRED, CONSTRUCT, INSPECT, AND IF NECESSARY, RECONSTRUCT TEMPORARY BERMS, DRAINS, DITCHES, SILT FENCES AND SEDIMENT TRAPS INCLUDING MULCHING AND SEEDING.
8) BEGIN EXCAVATION FOR AND CONSTRUCTION OF TOWERS AND PLATFORMS.
9) COMPLETE PERMANENT SEEDING AND LANDSCAPING.
10) NO STORM WATER FLOW SHALL BE DIVERTED TO ANY WETLANDS.
11) AFTER GRASS HAS BEEN FULLY GERMINATED IN ALL SEEDED AREAS, REMOVE ALL TEMPORARY EROSION CONTROL MEASURES.

EROSION CONTROL MEASURES:

1) DISTURBED AREAS SHALL BE KEPT TO THE MINIMUM AREA NECCESSARY TO CONSTRUCT THE ROADWAYS AND ASSOCIATED DRAINAGE FACILITIES.
2) HAY BALE BARRIERS AND SEDIMENT TRAPS SHALL BE INSTALLED AS REQUIRED. BARRIERS AND TRAPS ARE TO BE MAINTAINED AND CLEANED UNTIL ALL SLOPES HAVE A HEALTHY STAND OF GRASS.
3) BALED HAY AND MULCH SHALL BE MOWINGS OF ACCEPTABLE HERBACEOUS GROWTH, FREE FROM NOXIOUS WEEDS OR WOODY STEMS, AND SHALL BE DRY. NO SALT HAY SHALL BE USED.
4) FILL MATERIAL SHALL BE FREE FROM STUMPS, WOOD, ROOTS, ETC.
5) STOCKPILED MATERIALS SHALL BE PLACED ONLY IN AREAS SHOWN ON THE PLANS. STOCKPILES SHALL BE PROTECTED BY SILTATION FENCE AND SEEDED TO PREVENT EROSION. THESE MEASURES SHALL REMAIN UNTIL ALL MATERIAL HAS BEEN PLACED OR DISPOSED OFF SITE.
6) ALL DISTURBED AREAS SHALL BE LOAMED AND SEEDED. A MINIMUM OF 4 INCHES OF LOAM SHALL BE INSTALLED WITH NOT LESS THAN ONE POUND OF SEED PER 50 SQUARE YARDS OF AREA.
7) APPLICATION OF GRASS SEED, FERTILIZERS AND MULCH SHALL BE ACCOMPLISHED BY BROADCAST SEEDING OR HYDROSEEDING AT THE RATES OUTLINED BELOW:

LIMESTONE:75-100 LBS./1,000 SQUARE FEET.
FERTILIZER:RATE RECOMMENDED BY MANUFACTURER.
MULCH: HAY MULCH APPROXIMATELY 3 TONS/ACRE UNLESS EROSION CONTROL MATTING IS USED.

SEED MIX (SLOPES LESS THAN 4:1)	LBS./ACRE
CREEPING RED FESCUE	20
TALL FESCUE	20
REDTOP	2
	42

SLOPE MIX (SLOPES GREATER THAN 4:1)	LBS./ACRE
CREEPING RED FESCUE	20
TALL FESCUE	20
BIRDSFOOT TREEFOIL	8
	48

TREATMENT SWALE PLANTING SPECIFICATIONS

TALL FESCUE	20 LBS/ACRE	OR	0.45 LBS/10,000 SF
CREEPING RED FESCUE	20 LBS/ACRE	OR	0.45 LBS/10,000 SF
BIRDSFOOT TREFOIL	8 LBS/ACRE	OR	0.20 LBS/10,000 SF

LIME AND FERTILIZER SHOULD BE APPLIED PRIOR TO OR AT TIME OF SEEDING AND INCORPORATED INTO THE SOIL. THE FOLLOWING RATES ARE RECOMMENDED:

AGRICULTURAL LIMESTONE	2 TONS/ACRE	OR	100 LBS/1,000 SF
NITROGEN (N)	50 LBS/ACRE	OR	1.1 LBS/10,000 SF
PHOSPHATE (P205)	100 LBS/ACRE	OR	2.2 LBS/10,000 SF
POTASH (K20)	100 LBS/ACRE	OR	2.2 LBS/10,000 SF

(THIS IS EQUIVALENT TO 500 LBS/ACRE OF 10-20-20 FERTILIZER OR 1,000 LBS/ACRE OF 5-10-10).

8) AFTER ALL DISTURBED AREAS HAVE BEEN STABILIZED THE TEMPORARY EROSION CONTROL MEASURES ARE TO BE REMOVED.
9) PAVED ROADWAYS MUST BE KEPT CLEAN AT ALL TIMES.
10) ALL CATCH BASIN INLETS WILL BE PROTECTED WITH LOW POINT SEDIMENTATION BARRIER.
11) ALL STORM DRAINAGE OUTLETS WILL BE STABILIZE AND CLEANED AS REQUIRED, BEFORE THE DISCHARGE POINTS BECOME OPERATIONAL.
12) ALL DEWATERING OPERATIONS MUST DISCHARGE DIRECTLY INTO A SEDIMENT FILTER AREA.
13) NO DISCHARGE SHALL BE DIRECTED TOWARDS ANY PROPOSED DITCHES, SWALES, OR PONDS UNTIL THEY HAVE BEEN PROPERLY STABILIZED.

AMERICAN TOWER CORPORATION
116 HUNTINGTON AVE. 11TH FLOOR
BOSTON, MA 02116

CELLCO PARTNERSHIP D.B.A.
verizon

Hudson Design Engineering PLLC
29 HAMA ROAD
HUDSON, NY 12534
TEL: (978) 557-5553
FAX: (978) 336-5586

STATE OF NEW YORK
DEREK J. CREASER
094307
LICENSED PROFESSIONAL ENGINEER

CHECKED BY: AT

APPROVED BY: DJC

SUBMITTALS

REV.	DATE	DESCRIPTION	BY
5	11/29/17	REVISED FOR PERMITTING	SB
4	08/31/17	REVISED FOR PERMITTING	SB
3	07/17/17	REVISED FOR PERMITTING	SB
2	06/20/17	REVISED FOR PERMITTING	SB
1	04/27/17	ISSUED FOR PERMITTING	EB
0	04/18/17	ISSUED FOR REVIEW	SB

ATC SITE NUMBER:
201958
SITE NAME:
CORFU

SITE ADDRESS:
9657 FARGO ROAD
DARIEN, NY 14036
GENESEE COUNTY

SHEET TITLE
EROSION CONTROL NOTES & DETAILS

SHEET NUMBER
A-6

ELECTRICAL NOTES

1. ALL ELECTRICAL WORK SHALL CONFORM TO THE REQUIREMENTS OF THE NATIONAL ELECTRICAL CODE (NEC) AS WELL AS APPLICABLE STATE AND LOCAL CODES.
2. ALL ELECTRICAL ITEMS SHALL BE U.L. APPROVED OR LISTED AND PROCURED PER SPECIFICATION REQUIREMENTS.
3. THE ELECTRICAL WORK INCLUDES ALL LABOR AND MATERIAL DESCRIBED BY DRAWINGS AND SPECIFICATION INCLUDING INCIDENTAL WORK TO PROVIDE COMPLETE OPERATING AND APPROVED ELECTRICAL SYSTEM.
4. GENERAL CONTRACTOR SHALL PAY FEES FOR PERMITS, AND IS RESPONSIBLE FOR OBTAINING SAID PERMITS AND COORDINATION OF INSPECTIONS.
5. ELECTRICAL AND TELCO WIRING EXPOSED TO WEATHER SHALL BE IN WATER TIGHT GALVANIZED RIGID STEEL CONDUITS OR SCHEDULE 80 PVC (AS PERMITTED BY CODE) AND WHERE REQUIRED IN LIQUID TIGHT FLEXIBLE METAL OR NONMETALLIC CONDUITS.
6. RIGID STEEL CONDUITS SHALL BE GROUNDED AT BOTH ENDS.
7. ELECTRICAL WIRING SHALL BE COPPER WITH TYPE XHHW, THWN, OR THIN INSULATION.
8. RUN ELECTRICAL CONDUIT OR CABLE BETWEEN ELECTRICAL METER BANK AND PROPOSED CELL SITE POWER PEDESTAL AS INDICATED ON THIS DRAWING. PROVIDE FULL LENGTH PULL ROPE. COORDINATE INSTALLATION WITH UTILITY COMPANY.
9. RUN TELCO CONDUIT OR CABLE BETWEEN TELEPHONE UTILITY DEMARCATION POINT AND PROPOSED CELL SITE TELCO CABINET AND BTS CABINET AS INDICATED ON DRAWING A-3. PROVIDE FULL LENGTH PULL ROPE IN INSTALLED TELCO CONDUIT. PROVIDE GREENLEE CONDUIT MEASURING TAPE AT EACH END.
10. ALL EQUIPMENT LOCATED OUTSIDE SHALL HAVE NEMA 3R ENCLOSURE.

LEGEND

A	AMPERE
V	VOLT
KWH	KILOWATT – HOUR
C	CONDUIT
GRC	GALVANIZED RIGID CONDUIT
BGR	BURIED GROUND RING
BTCW	BARE TINNED SOLID COPPER WIRE
G	GROUND
⏚	GROUND
MGB	MASTER GROUND BAR
	O MECHANICAL CONNECTION
	● CADWELD CONNECTION
EGB	EQUIPMENT GROUND BAR
----G----	GROUND COPPER WIRE, SIZE AS NOTED
———	EXPOSED WIRING
———	#6G AWG INSULATED STRANDED
———	COAXIAL CABLE/HYBRID CABLE
⊙	5/8"x8' COPPER CLAD STAINLESS STEEL GROUND ROD
⊛	GROUND ROD WITH TEST WELL
-⊖-⊖-	● EXOTHERMIC (CAD WELD) OR
	O MECHANICAL (COMPRESSION TYPE) CONNECTION
PPC	POWER PROTECTION CABINET
⊠	OMNI-DIRECTIONAL ELECTRONIC MARKER SYSTEM (EMS) BALL

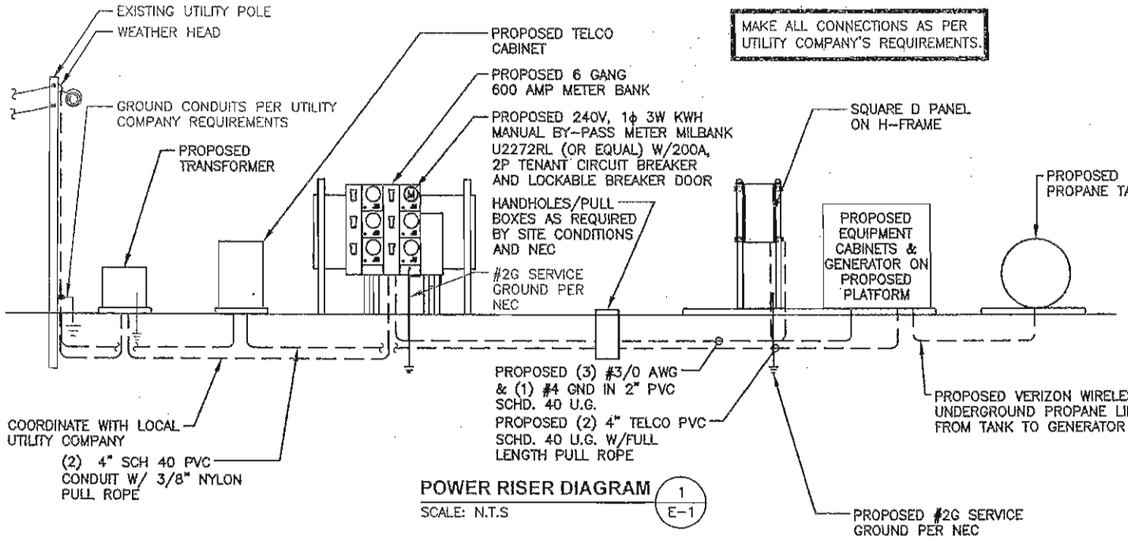

POWER RISER DIAGRAM (1 / E-1)
SCALE: N.T.S

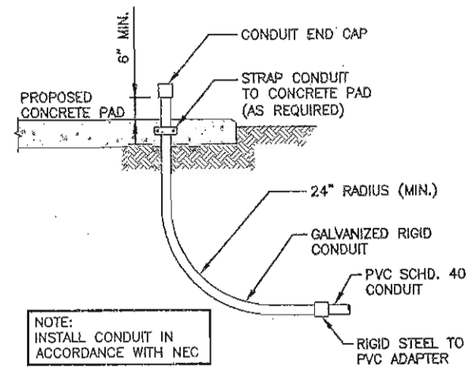

CONDUIT SWEEP DETAIL (2 / E-1)
SCALE: N.T.S

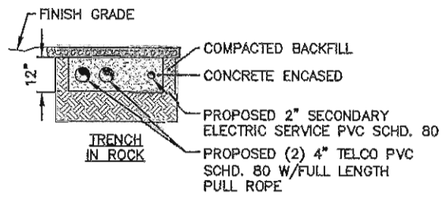

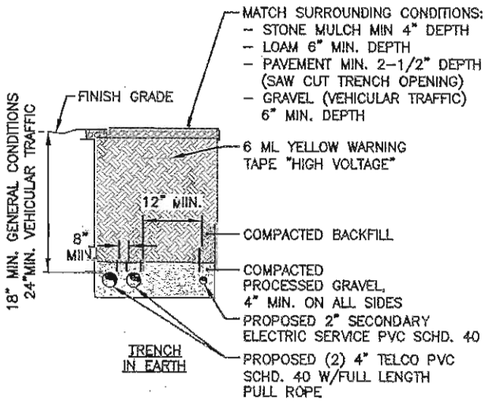

BURIED CONDUIT DETAIL (3 / E-1)
SCALE: N.T.S

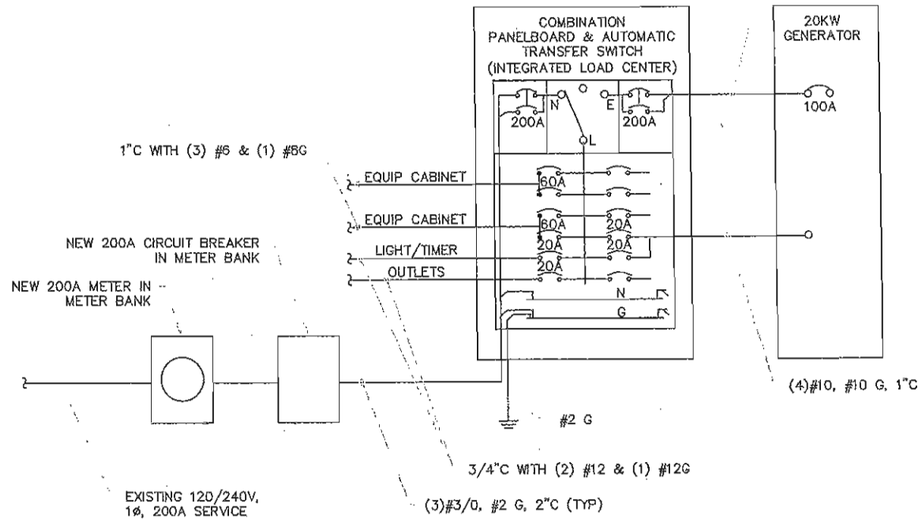

(3)#4, #8 G, 1-1/4"C (TYP)

NOTES:

1. EMT CONDUIT W/COMPRESSION FITTINGS SHALL BE USED ABOVE GRADE.
2. SCH 40 PVC CONDUIT SHALL BE USED BELOW GRADE.
3. SCH 80 PVC CONDUIT SHALL BE USED UNDER ROADWAY.

SINGLE LINE DIAGRAM (4 / E-1)
SCALE: N.T.S

AMERICAN TOWER CORPORATION
116 HUNTINGTON AVE. 11TH FLOOR
BOSTON, MA 02116

CELLCO PARTNERSHIP D.B.A.
verizon

Hudson Design Engineering
29 HALMA ROAD
HUDSON, NY 12534
TEL: (978) 557-5553
FAX: (978) 336-5586

STATE OF NEW YORK
DEREK J. CREAGER
109490?-1
LICENSED PROFESSIONAL ENGINEER

CHECKED BY: AT

APPROVED BY: DJC

SUBMITTALS

REV.	DATE	DESCRIPTION	BY
5	11/29/17	REVISED FOR PERMITTING	SB
4	08/31/17	REVISED FOR PERMITTING	SB
3	07/17/17	REVISED FOR PERMITTING	SB
2	06/20/17	REVISED FOR PERMITTING	SB
1	04/27/17	ISSUED FOR PERMITTING	EB
0	04/18/17	ISSUED FOR REVIEW	SB

ATC SITE NUMBER:
201958
SITE NAME:
CORFU

SITE ADDRESS:
9657 FARGO ROAD
DARIEN, NY 14036
GENESEE COUNTY

SHEET TITLE
ELECTRICAL ONE LINE DIAGRAM, NOTES, & DETAILS

SHEET NUMBER
E-1

GROUNDING PLAN NOTES:

1. ALL DETAILS ARE SHOWN IN GENERAL TERMS. ACTUAL INSTALLATION AND CONSTRUCTION MAY VARY DUE TO SITE SPECIFIC CONDITIONS.
2. GROUND ALL ANTENNA BASES, FRAMES, CABLE RUNS, AND OTHER METALLIC COMPONENTS USING GROUND WIRES AND CONNECT TO SURFACE MOUNTED BUS BARS. FOLLOW ANTENNA AND BTS MANUFACTURERS PRACTICES FOR GROUNDING REQUIREMENTS. GROUND COAX SHIELD AT BOTH ENDS AND EXIT FROM TOWER OR POLE USING MFR'S PRACTICES.
3. ALL GROUND CONNECTIONS SHALL BE CADWELD. ALL WIRES SHALL BE COPPER THHN/THWN. ALL GROUND WIRE SHALL BE GREEN INSULATED WIRE ABOVE GROUND.
4. CONTRACTOR TO VERIFY AND TEST GROUND TO SOURCE. GROUNDING AND OTHER OPERATIONAL TESTING WILL BE WITNESSED BY CARRIER REPRESENTATIVE.
5. REFER TO DIVISION 16 GENERAL ELECTRIC; GENERAL ELECTRICAL PROVISION AND COMPLY WITH ALL REQUIREMENTS OF GROUNDING STANDARDS.
6. ELECTRICAL CONTRACTOR TO PROVIDE DETAILED DESIGN OF GROUNDING SYSTEM, AND RECEIVE APPROVAL OF DESIGN BY AUTHORIZED CARRIER REPRESENTATIVE, PRIOR TO INSTALLATION OF GROUNDING SYSTEM. PHOTO DOCUMENT ALL CADWELDS AND GROUND RING
7. NOTIFY CONSTRUCTION MANAGER IF THERE ARE ANY DIFFICULTIES INSTALLING GROUNDING SYSTEM DUE TO SITE SOIL CONDITIONS.
8. TO AVOID TOWER FOUNDATION, GROUND RODS MAY BE INSTALLED AT AN ANGLE OR TOWER GROUND RING MAY BE EXTENDED AS NEEDED.
9. PER SOIL RESISTIVITY MEASUREMENTS, THIS DESIGN PROVIDES FOR XX OHMS RESISTANCE TO REMOTE EARTH.

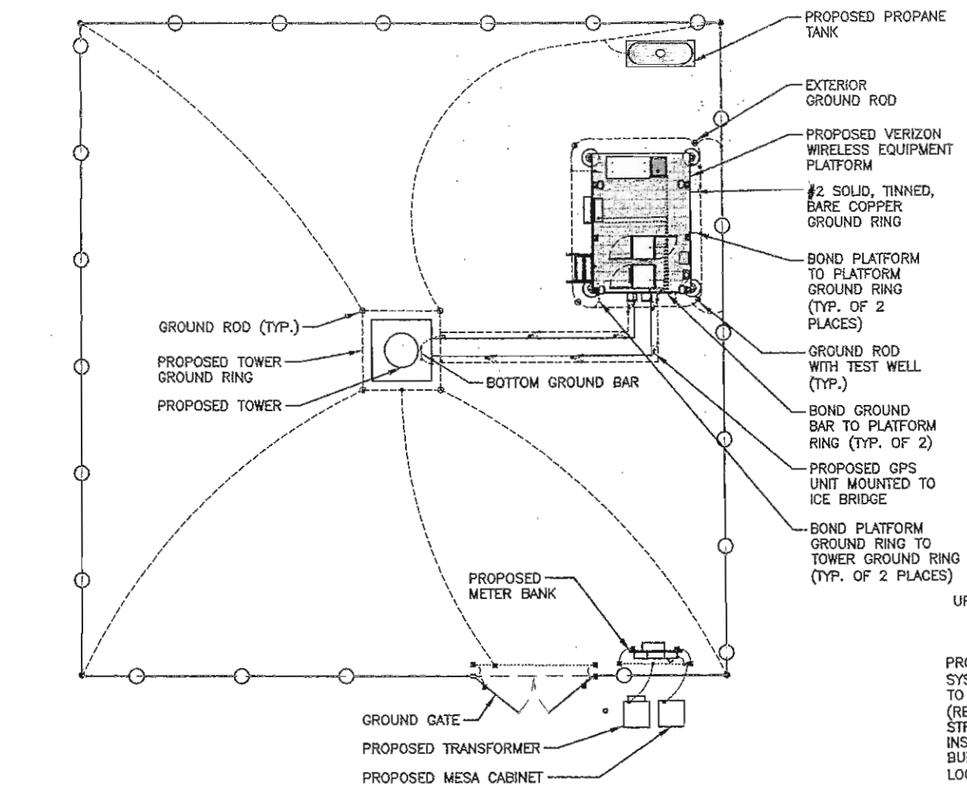

TRUE NORTH
10°55'
MAGNETIC NORTH

GROUNDING PLAN (1 / G-1)
SCALE: N.T.S

NOTE:
1. BASE BID TO INCLUDE INSTALLATION OF A BURIED GROUND RING AND (6) GROUND RODS OR SINGLE XIT HORIZONTAL CHEMICAL ROD AS DETERMINED BY FIELD CONDITIONS. ADDITIONAL RODS AS REQUIRED TO ACHIEVE 5 OHMS RESISTANCE.
2. MAXIMUM VERTICAL/HORIZONTAL DISTANCE BETWEEN CABLE GROUNDING KITS SHALL NOT EXCEED 100 FEET. INSTALL ADDITIONAL KITS AS REQUIRED BY FIELD CONDITIONS.
3. ALL CONNECTIONS TO EQUIPMENT PER MANUFACTURER'S GUIDELINES.
4. ALL ABOVE-GRADE DOWNLEADS TO BGR SHALL BE INSTALLED IN 1" NON-METALLIC CONDUIT SECURED EVERY 2' WITH NON-METALLIC CLIPS.

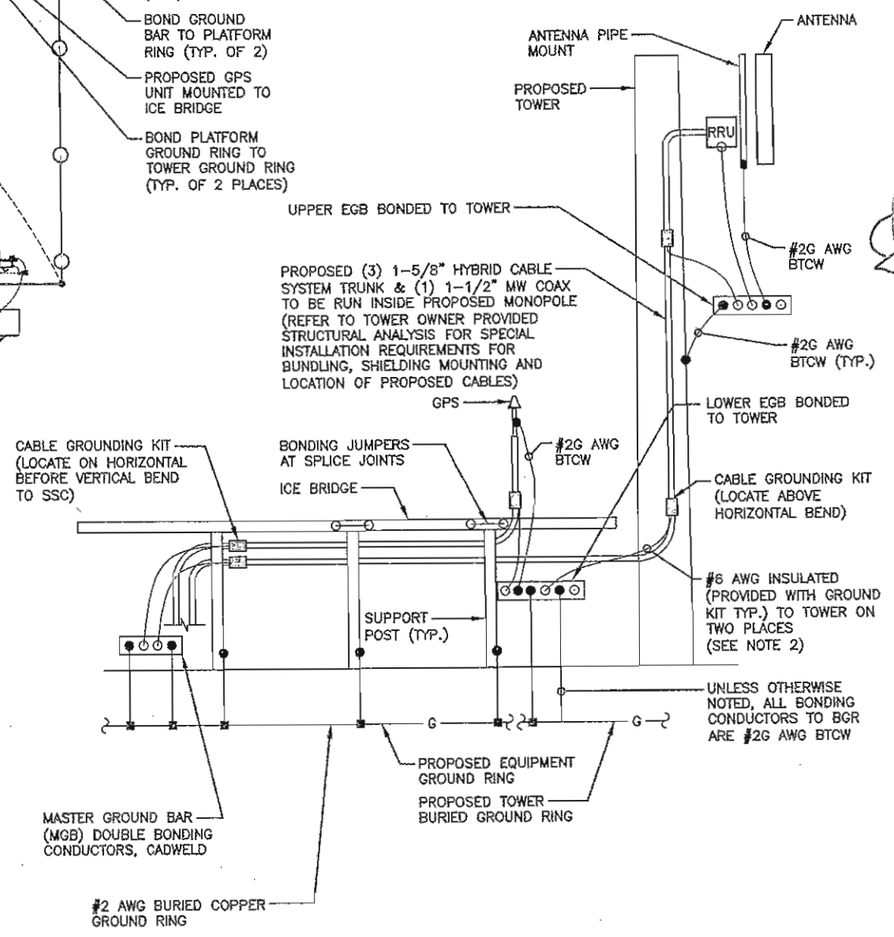

GROUNDING RISER DIAGRAM (3 / G-1)
SCALE: N.T.S

LEGEND

METER	COPPER GROUND BAR
CIRCUIT BREAKER	GROUND CONDUCTOR BY CONTRACTOR
CADWELD TYPE CONNECTION BY CONTRACTOR	GROUND RING BY CONTRACTOR
COAXIAL CABLE SHIELD GROUND KIT CONNECTION	GROUND ROD WITH TEST WELL
COMPRESSION FITTING GROUND CONNECTION	GROUND ROD

ABBREVIATIONS

A	AMPERE	W	WIRE
C	CONDUIT	WP	WEATHERPROOF
GND	GROUND	ø	PHASE
KWH	KILOWATT HOUR	TGB	TOP GROUND BAR
P	POLE	MGB	MASTER GROUND BAR
SN	SOLID NEUTRAL	BGB	BOTTOM GROUND BAR
SW	SWITCH	EGB	EXISTING GROUND BAR
V	VOLT		

AMERICAN TOWER CORPORATION
116 HUNTINGTON AVE. 11TH FLOOR
BOSTON, MA 02116

CELLCO PARTNERSHIP D.B.A.
verizon

Hudson Design Engineering PLLC
29 HAMM ROAD
HUDSON, NY 12534
TEL: (978) 557-5553
FAX: (978) 336-5586

STATE OF NEW YORK
DEREK J. CREASER
099307-1
LICENSED PROFESSIONAL ENGINEER

CHECKED BY: AT
APPROVED BY: DJC

SUBMITTALS

REV.	DATE	DESCRIPTION	BY
5	11/29/17	REVISED FOR PERMITTING	SB
4	08/31/17	REVISED FOR PERMITTING	SB
3	07/17/17	REVISED FOR PERMITTING	SB
2	06/20/17	REVISED FOR PERMITTING	SB
1	04/27/17	ISSUED FOR PERMITTING	EB
0	04/18/17	ISSUED FOR REVIEW	SB

ATC SITE NUMBER:
201958
SITE NAME:
CORFU

SITE ADDRESS:
9657 FARGO ROAD
DARIEN, NY 14036
GENESEE COUNTY

SHEET TITLE
GROUNDING SCHEMATIC & RISER DIAGRAM

SHEET NUMBER
G-1

NOTES:

1. SEPARATION DIMENSION TO BE VERIFIED WITH LOCAL UTILITY COMPANY REQUIREMENTS.
2. COORDINATE UTILITY, LOCATE BEFORE DIGGING.
3. CONDUIT TRENCHING DEPTHS AT 36" OR 6" BELOW FROST LINE, WHICHEVER IS GREATER.
4. ALL RING AND RADIAL DEPTHS AT 30" OR 6" BELOW FROST LINE, WHICHEVER IS GREATER.
5. WELD GROUND TO FENCE AS LOW AS POSSIBLE TO DETER COPPER THEFT

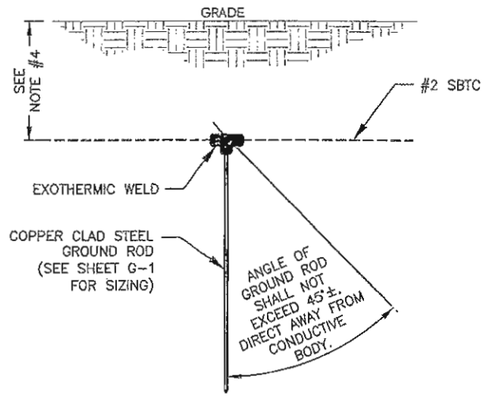

GROUND ROD DETAIL 2 / G-2
SCALE: N.T.S

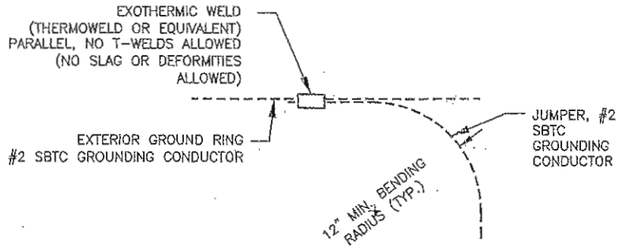

TIE CONNECTION DETAIL 1 / G-2
SCALE: N.T.S

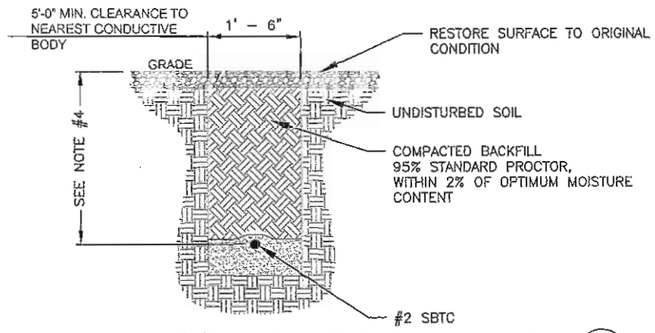

GROUND CONNECTION TRENCH DETAIL 3 / G-2
SCALE: N.T.S

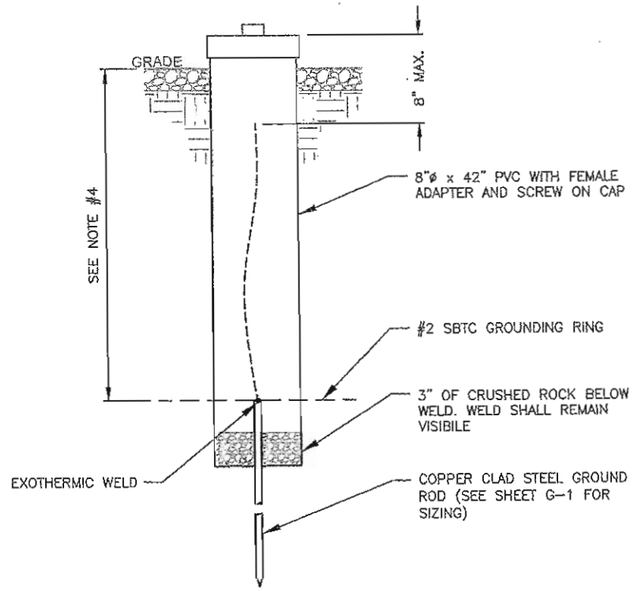

TEST WELL DETAIL 4 / G-2
SCALE: N.T.S

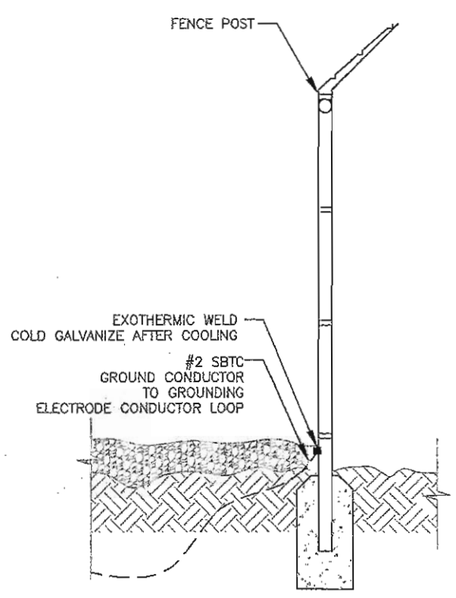

FENCE GROUNDING DETAIL 5 / G-2
SCALE: N.T.S

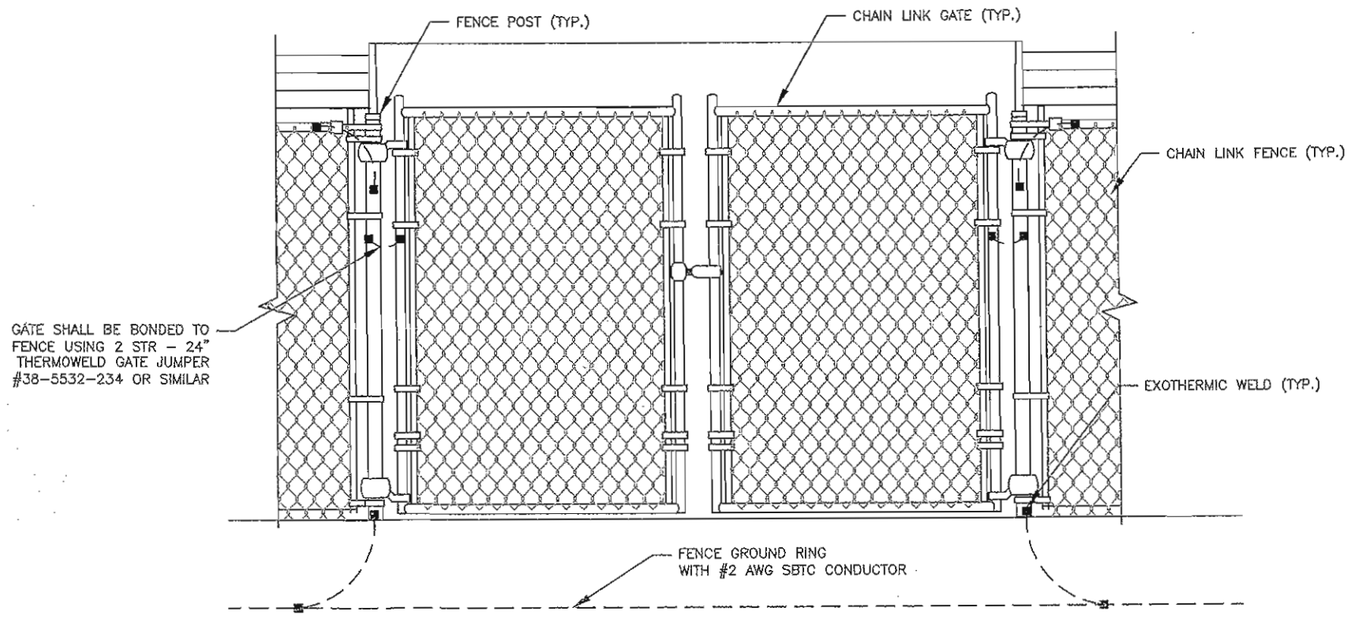

GATE GROUNDING DETAIL 6 / G-2
SCALE: N.T.S

AMERICAN TOWER CORPORATION
116 HUNTINGTON AVE. 11TH FLOOR
BOSTON, MA 02116

CELLCO PARTNERSHIP D.B.A.
verizon

Hudson Design Engineering PLLC
29 HAMM ROAD
HUDSON, NY 12534
TEL: (978) 557-5553
FAX: (978) 336-5586

STATE OF NEW YORK
DEREK J. CREASER
094307-1
LICENSED PROFESSIONAL ENGINEER

CHECKED BY: AT

APPROVED BY: DJC

SUBMITTALS

REV.	DATE	DESCRIPTION	BY
5	11/29/17	REVISED FOR PERMITTING	SB
4	08/31/17	REVISED FOR PERMITTING	SB
3	07/17/17	REVISED FOR PERMITTING	SB
2	06/20/17	REVISED FOR PERMITTING	SB
1	04/27/17	ISSUED FOR PERMITTING	EB
0	04/18/17	ISSUED FOR REVIEW	SB

ATC SITE NUMBER:
201958
SITE NAME:
CORFU

SITE ADDRESS:
9657 FARGO ROAD
DARIEN, NY 14036
GENESEE COUNTY

SHEET TITLE
GROUNDING DETAILS

SHEET NUMBER
G-2

T-03-DAR-2-18

04/20/2016