GENESEE COUNTY PLANNING BOARD REFERRALS
NOTICE OF FINAL ACTION

GCDP Referral ID	**T-09-BAT-4-18**
Review Date	**4/12/2018**
Municipality	**BATAVIA, T.**
Board Name	**PLANNING BOARD**
Applicant's Name	**Wal-Mart Real Estate Business Trust**
Referral Type	**Site Plan Review**
Variance(s)	
Description:	**Site Plan Review to install a pickup canopy and parking striping, new directional signage in parking lot and new wall sign.**
Location	**4133 Veterans Memorial Dr., Batavia**
Zoning District	**Commercial (C) District**

PLANNING BOARD DECISION

APPROVAL

EXPLANATION:

The proposed improvements should pose no significant county-wide or inter-community impact.

Felix A. Ottaviano

Director

April 12, 2018

Date

If the County Planning Board disapproved the proposal, or recommends modifications, the referring agency shall NOT act contrary to the recommendations except by a vote of a majority plus one of all the members and after the adoption of a resolution setting forth the reasons for such contrary action. Within 30 days after the final action the referring agency shall file a report of final action with the County Planning Board. An action taken form is provided for this purpose and may be obtained from the Genesee County Planning Department.

SEND OR DELIVER TO:
GENESEE COUNTY DEPARTMENT OF PLANNING
3837 West Main Street Road
Batavia, NY 14020-9404
Phone: (585) 815-7901

DEPARTMENT USE ONLY:
GCDP Referral # T-09-BAT-4-18

RECEIVED
Genesee County
Dept. of Planning
4/4/2018

* GENESEE COUNTY *
PLANNING BOARD REFERRAL

Required According to:
GENERAL MUNICIPAL LAW ARTICLE 12B, SECTION 239 L, M, N
(Please answer ALL questions as fully as possible)

1. REFERRING BOARD(S) INFORMATION

Board(s) Town of Batavia Planning Board
Address 3833 West Main St.
City, State, Zip Batavia, NY 14020
Phone (585) 343 - 1729 Ext. 208

2. APPLICANT INFORMATION

Name Wal-Mart
Address 4133 Vet-Mem Dr.
City, State, Zip Batavia, NY 14020
Phone (201) 307 - 6153 Ext. Email

MUNICIPALITY: ☐ City ☒ Town ☐ Village of Batavia

3. TYPE OF REFERRAL: (Check all applicable items)

- ☐ Area Variance
- ☐ Use Variance
- ☐ Special Use Permit
- ☒ Site Plan Review
- ☐ Zoning Map Change
- ☐ Zoning Text Amendments
- ☐ Comprehensive Plan/Update
- ☐ Other:
- Subdivision Proposal
  - ☐ Preliminary
  - ☐ Final

4. LOCATION OF THE REAL PROPERTY PERTAINING TO THIS REFERRAL:

A. Full Address 4133 Vet-Mem Dr.
B. Nearest intersecting road Lewiston Rd.
C. Tax Map Parcel Number 8.-1-55
D. Total area of the property 25.7 Area of property to be disturbed 1000 sq/ft
E. Present zoning district(s) C

5. REFERRAL CASE INFORMATION:

A. Has this referral been previously reviewed by the Genesee County Planning Board?

☒ NO ☐ YES If yes, give date and action taken

B. Special Use Permit and/or Variances refer to the following section(s) of the present zoning ordinance and/or law

C. Please describe the nature of this request install a canopy system

6. ENCLOSURES – Please enclose copy(s) of all appropriate items in regard to this referral

- ☒ Local application
- ☒ Site plan
- ☐ Subdivision plot plans
- ☐ SEQR forms
- ☐ Zoning text/map amendments
- ☐ Location map or tax maps
- ☐ Elevation drawings
- ☐ Agricultural data statement
- ☐ New or updated comprehensive plan
- ☐ Photos
- ☐ Other:

7. CONTACT INFORMATION of the person representing the community in filling out this form (required information)

Name Bruce Gerould Title CEO Phone (585) 343 - 1729 Ext. 208
Address, City, State, Zip 3833 West Main St. Rd. Email

Building and Zoning Application Permit No._____

Town of Batavia 3833 West Main Rd. Batavia NY 14020 PH. 585-343-1729

Date 04 / 02 / 18 Zone_____ Flood Zone_____ Wellhead Protection _____ Corner Lot_____

New Construction ☐ Fence ☐ Pond ☐ Sign ☐ Alteration(s) ☒ Addition ☐ Demolition ☐

Accessory Bldg. ☐ Mobile Home ☐ Fill Permit ☐ Home Occupation ☐ Land Separation ☐ Site Plan Approval ☐

Special Use Permit ☐ Temporary Use ☐ Subdivision ☐ Zoning Variance Request ☐ Other ☐ Specify:_____

Tax Map No. 8.-1-55

Owners Name WAL-MART B.E. BUS. TRUST Phone No. (479) 273-4000

Address 702 S.W. EIGHTH STREET, BENTONVILLE, AR 72716 Project Road Width _____ft

Applicants Name PERRY M. PETRILLO ARCHITECTS, PC Project Address 4133 Veteran's Memorial Dr., BATAVIA

E Mail Address ppetrillo@petrilloarchitects.com Phone No (201) 307-6153

Description of Project: MINOR ALTERATIONS TO THE EXISTING WALMART STORE PROPOSED: NEW PICKUP CANOPY AND PARKING STRIPING, NEW DIRECTIONAL SIGNAGE IN PARKING LOT, NEW WALL SIGN

Existing Use WALMART RETAIL STORE Proposed Use (NO CHANGE)

Estimated Cost Building $125,000.00 Plumbing N/A Mechanical N/A ~~Miscellaneous~~ ELECTRICAL: $35,000.00

SEQR CLASSIFICATION Type 1 ☐ Type 2 ☐ Unlisted ☐

Review completed by Planning Board ☐_____ Zoning Board of Appeals ☐_____

Permit Fee $_____ **Application Date** ____/____/____ **Permit Expires On** ____/____/____

Issuing Officer _____ **Date**____/____/____

IN SIGNING THIS DOCUMENT I HEARBY GIVE THE RIGHT OF AN ON SITE INSPECTION TO THE TOWN OF BATAVIA CODE ENFORCEMENT OFFICIAL OR THEIR DESIGNE. ALL PROVISIONS OF LAWS AND ORDINANCES GOVERNING THIS TYPE OF WORK WILL BE COMPLIED WITH WHETHER SPECIFIED HEREIN OR NOT. THE GRANTING OF A PERMIT DOES NOT PRESUME TO GIVE AUTHORITY TO VIOLATE OR CANCEL THE PROVISIONS OF ANY OTHER STATE OR LOCAL LAW REGULATING CONSTRUCTION OR THE PREFORMANCE OF CONSTRUCTION.

I, Perry M. Petrillo (Architect), as Owner or Authorized Agent hereby declare that the statements and information on the foregoing application are true and accurate, to the best of my knowledge.

_____ 04.02.18

Signature of Owner or Authorized Agent Date

Walmart

PICKUP LCC

BATAVIA, NY
STORE NO.: 2088-235

PROTO CYCLE: 11/14/17
DATE: 02/07/18
PROTO: (LOW CAP CANOPY)

SHEET INDEX

ARCHITECTURAL	
C1	COVER SHEET
SP1	SITE PLAN AND DEMOLITION SITE PLAN
SP1.1	PICKUP SITE DETAILS
A2	BUILDING ELEVATIONS AND SECTIONS
A3.0	CURVED FABRIC CANOPY

ABBREVIATIONS

GENERAL ABBREVIATIONS		GENERAL ABBREVIATIONS		GENERAL ABBREVIATIONS	
ABBR	DEFINITION	ABBR	DEFINITION	ABBR	DEFINITION
AB	ANCHOR BOLT	GA	GAUGE	PL	PLATE
ACI	AMERICAN CONCRETE INSTITUTE	GC	GENERAL CONTRACTOR	PLF	POUNDS PER LINEAR FOOT
AFF	ABOVE FINISHED FLOOR	GM	GENERAL MERCHANDISE	PMEJ	PREMOLDED EXPANSION JOINT
AHU	AIR HANDLING UNIT	GR	GROCERY	PT	PRESSURE TREATED
AISC	AMERICAN INSTITUTE OF STEEL CONSTRUCTION	GYP BD	GYPSUM BOARD	PSF	POUNDS PER SQUARE FOOT
ARCH	ARCHITECTURAL	H	HEIGHT	PSI	POUNDS PER SQUARE INCH
ASTM	AMERICAN SOCIETY OF TESTING AND MATERIALS	HMR	HOME MEAL REPLACEMENT	PS	PROTECTIVE SURFACING
AWS	AMERICAN WELDING SOCIETY	HORIZ	HORIZONTAL	PVC	POLYVINYL CHLORIDE
BD	BOARD	HSA	HEADED STUD ANCHOR	QTY	QUANTITY
BFF	BELOW FINISHED FLOOR	HSS	HOLLOW STRUCTURAL SECTION	REF	REFER TO
BL	BLOCK LINTEL	INFO	INFORMATION	REINF	REINFORCING
BLDG	BUILDING	ISO	ISOLATION	REQD	REQUIRED
BO	BOTTOM OF	JBE	JOIST BEARING ELEVATION	REV	REVERSE
BOS	BOTTOM OF STEEL OR BOTTOM OF STUD	JST	JOIST	RI	REACH IN
BTM	BOTTOM	JT	JOINT	RO	ROUGH OPENING
BRG	BEARING	KSI	KIPS PER SQUARE INCH	RTU	ROOF TOP UNIT
CD	CASH DRAWER	L	LENGTH	SCHED	SCHEDULE
CJ	CONTROL JOINT	LB	POUNDS	SDI	STEEL DECK INSTITUTE
CL	CENTERLINE	LLH	LONG LEG HORIZONTAL	SIM	SIMILAR
CLR	CLEAR	LLV	LONG LEG VERTICAL	SJI	STEEL JOIST INSTITUTE
CMU	CONCRETE MASONRY UNIT	LONG	LONGITUDINAL	SP	SPACES
COL	COLUMN	MAX	MAXIMUM	SPECS	SPECIFICATIONS
CONC	CONCRETE	MDF	MEDIUM DENSITY FIBERBOARD	SS	STAINLESS STEEL
CONST	CONSTRUCTION	MECH	MECHANICAL	STRUC	STRUCTURAL
CONT	CONTINUOUS	MFR	MANUFACTURER	T&B	TOP AND BOTTOM
DIA	DIAMETER	MIN	MINIMUM	THK	THICKNESS
DS	DOWNSPOUT	MISC	MISCELLANEOUS	TO	TOP OF
EAS	EMERGENCY ACCESS SYSTEM	MO	MASONRY OPENING	TOC/TC	TOP OF CONCRETE
EDC	ELECTRICAL DISTRIBUTION CENTER	MTL	METAL	TOF	TOP OF FOOTING
EIFS	EXTERIOR INSULATION AND FINISH SYSTEM	NIC	NOT IN CONTRACT	TOGB	TOP OF GRADE BEAM
EJ	EXPANSION JOINT	NFRP	NON FIBERGLASS REINFORCED PLASTIC	TOM	TOP OF MASONRY
EL	ELEVATION	NO	NUMBER	TOP/TP	TOP OF PAVING
ELEC	ELECTRICAL	NS	NEAR SIDE	TOS	TOP OF STEEL OR TOP OF STUD
EQ	EQUAL	NTS	NOT TO SCALE	TRANS	TRANSVERSE
ES	EQUIPMENT SUPPLIER	OC	ON CENTER	TYP	TYPICAL
EW	EACH WAY	OCH	ON CENTER HORIZONTALLY	UNO	UNLESS NOTED OTHERWISE
EXT	EXTERIOR	OCV	ON CENTER VERTICALLY	VERT	VERTICAL
FDN	FOUNDATION	OD	OUTSIDE DIAMETER	VTR	VENT THROUGH ROOF
FF	FINISHED FLOOR	OH	OPPOSITE HAND	W	WIDTH
FS	FAR SIDE	PAF	POWDER ACTUATED FASTNER	WD	WOOD
FTG	FOOTING	PCF	POUNDS PER CUBIC FOOT		
FV	FIELD VERIFY	PLAM	PLASTIC LAMINATE		

GENERAL REQUIREMENTS

1. ALL WORK SHALL BE DONE IN A SAFE MANNER AND IN STRICT ACCORDANCE WITH THE LOCAL AND/OR STATE (IF APPLICABLE) BUILDING CODES, NATIONAL ELECTRIC CODE (NEC), ADA-ADAAGS (ADOPTED HANDICAP ACCESSIBILITY REQUIREMENTS), OSHA AND ALL APPLICABLE CODES, REGULATION, ORDINANCES, AND AUTHORITIES HAVING JURISDICTION.
2. EACH CONTRACTOR AND THEIR SUB-CONTRACTORS ARE RESPONSIBLE FOR HAVING A THOROUGH KNOWLEDGE OF ALL DRAWINGS AND SPECIFICATIONS IN THEIR RELATED FIELD. THE FAILURE TO ACQUAINT HIMSELF WITH THIS KNOWLEDGE DOES NOT RELIEVE HIM OF ANY RESPONSIBILITY FOR PERFORMING HIS WORK PROPERLY. NO ADDITIONAL COMPENSATION SHALL BE ALLOWED BECAUSE OF CONDITIONS THAT OCCUR DUE TO FAILURE TO FAMILIARIZE WORKERS WITH THIS KNOWLEDGE.
3. THE EXISTING BUILDING SHALL BE PROTECTED FROM MOISTURE, DUST AND DEBRIS. INSTALL DUST PARTITIONS OR DRAPES AS REQUIRED AND/OR DIRECTED BY THE WALMART CONSTRUCTION MANAGER TO KEEP DUST AND MOISTURE FROM THE OPERATING AREAS OF THE STORE.
4. ANY DAMAGE TO WALMART PROPERTY, WHICH OCCURS DURING THE PROCESS OF CONSTRUCTION, SHALL BE REPAIRED/REPLACED AT NO ADDITIONAL COST TO WALMART. THIS INCLUDES ALL MERCHANDISE. THE CONTRACTOR SHALL PAY WALMART THE RETAIL COST FOR ALL DAMAGED MERCHANDISE.
5. THE CONTRACTOR SHALL KEEP WORK AREA CLEAN AND FREE OF DEBRIS AND SHALL REMOVE ALL TRASH AND DEBRIS FROM THE CONSTRUCTION AREA DAILY. NO FLAMMABLE MATERIALS OR LIQUIDS MAY BE STORED IN THE EXISTING BUILDING OR CONSTRUCTION AREAS.
6. REMOVE ANY EXISTING ITEMS, SERVICES, FINISHES OR SURFACES AS REQUIRED FOR THE INSTALLATION OF NEW CONSTRUCTION. PROVIDE FURRING FOR CONDUITS AND PIPING, SHOWN OR NOT, AND FINISH OUT FURRING TO MATCH ADJACENT FINISHES.
7. ALL ADJACENT TENANT SPACES SHALL REMAIN IN SERVICE DURING DEMOLITION AND CONSTRUCTION.
8. SCHEDULE ALL WORK TO KEEP DISRUPTIONS TO THE STORE OPERATIONS AT A MINIMUM. COORDINATE UTILITY DISRUPTIONS WITH THE WALMART STORE MANAGER.
9. REPAIR, RE-REOUTE, AND EXTEND ALL SERVICES, PIPING, CONDUIT OF EXISTING ITEMS AND EQUIPMENT AS REQUIRED DURING THE CONSTRUCTION PROCESS FOR THE COMPLETE INSTALLATION AND OPERATIONS OF NEW EQUIPMENT. THIS INCLUDES ALL ITEMS SHOWN OR NOT SHOWN ON THE DRAWINGS. RESET EXISTING EQUIPMENT OR RELATED ITEMS AS REQUIRED FOR PROPER OPERATION.
10. WHERE EXISTING FINISHES ARE TO REMAIN, CLEAN, REPAIR, PATCH, AND/OR REPAINT AS NECESSARY TO BLEND WITH ADJACENT SURFACES. COORDINATE WITH WALMART CONSTRUCTION MANAGER.
11. THE GENERAL CONTRACTOR SHALL BE RESPONSIBLE FOR THE TIMELY ORDERING OF MATERIALS TO PROHIBIT DELAYS OF THE CONSTRUCTION SCHEDULE OF THIS PROJECT. IT IS THE RESPONSIBILITY OF THE CONTRACTOR TO COORDINATE DELIVERY OF MATERIALS IN A TIMELY MANNER.
12. THE GENERAL CONTRACTOR SHALL RESPOND TO ALL REQUIREMENTS OF THE ARCHITECT FOR VERIFICATIONS, RESPONSES AND SUBMISSIONS.
13. DURING ENTIRE CONSTRUCTION PERIOD, PROVIDE ONE U.L. LISTED 2A-20BC DRY CHEMICAL FIRE EXTINGUISHER, OR ONE STANDARD U.L. LISTED 2-1/2 GALLON WATER (E-10) AND ONE U.L. LISTED 10BC CARBON DIOXIDE FIRE EXTINGUISHER MOUNTED TOGETHER IN EACH 3000 SQUARE FOOT OF WORK AREA OR FRACTION THEREOF (MINIMUM OF TWO AVAILABLE IN ALL CONSTRUCTION AREAS AT ALL TIMES).
14. IF MODIFICATION TO SPRINKLER SYSTEM IS REQUIRED, THE GENERAL CONTRACTOR SHALL HIRE A LICENSED SPRINKLER CONTRACTOR. THE CONTRACTOR IS TO SUBMIT SIGNED AND SEALED SPRINKLER DRAWINGS FOR APPROVAL TO THE AHJ PRIOR TO ANY ALTERATION OF THE AUTOMATIC SPRINKLER SYSTEM.
15. THE CONTRACTOR SHALL MAINTAIN THE INTEGRITY OF THE EXISTING BUILDING SECURITY AT ALL TIMES. THIS INCLUDES KEEPING THE BUILDING SECURE FROM PERSONS, ENVIRONMENTAL ELEMENTS OR HAZARDS. THE CONTRACTOR SHALL BE RESPONSIBLE TO MAINTAIN THE INTEGRITY OF ALL EXISTING SECURITY SYSTEM. THE CONTRACTOR SHALL OBTAIN PERMISSION FROM THE STORE MANAGER PRIOR TO THE MODIFICATION OF ANY EXISTING SECURITY SYSTEM FOR THE OPENING (DEMOLITION) OF ANY EXTERIOR WALL OR DOOR.
16. FIRE ALARM DRAWINGS TO BE PROVIDED BY WALMART ALARM SERVICES.
17. CONTRACTOR TO MAINTAIN ACCESS TO ALL EMERGENCY EGRESS EXITS DURING CONSTRUCTION OPERATIONS.

SITE VERIFICATION REQUIREMENTS

1. THE ARCHITECT HAS MADE THESE DRAWINGS BASED ON THE EXISTING BUILDING AND CONDITIONS. THE RESPONSIBILITY OF THE CONTRACTOR TO VERIFY ALL EXISTING CONDITIONS PRIOR TO THE SUBMISSION OF HIS BID AND TO THE COMMENCEMENT OF ANY WORK. NO ADDITIONAL COMPENSATION WILL BE PAID DUE TO THE CONTRACTOR'S FAILURE TO ACQUAINT HIMSELF WITH EXISTING SITE CONDITIONS WHICH INCLUDE, BUT ARE NOT LIMITED TO EXISTING WALL, CEILINGS, OR UTILITIES.
2. ANY DISCREPANCY WITH THE EXISTING SITE CONDITIONS AND/OR THE DRAWINGS SHALL BE BROUGHT TO THE ATTENTION OF THE ARCHITECT FOR CLARIFICATION AND INSTRUCTION. THESE CONSTRUCTION DOCUMENTS HAVE BEEN DESIGNED AND DRAWN ASSUMING EXISTING BUILDING CONDITIONS MATCH THE ORIGINAL DRAWINGS. THE GENERAL CONTRACTOR, IMMEDIATELY UPON ARRIVAL AT THIS SITE, SHALL VERIFY ALL EXISTING STRUCTURAL COLUMN DIMENSIONS, STRUCTURAL BEARING HEIGHTS, EXISTING DIMENSION, AND ROOFING CONDITIONS (INCLUDING PARAPETS). IF DISCREPANCIES ARE FOUND BETWEEN WHAT IS SHOWN ON THE DRAWINGS AND EXISTING FIELD CONDITIONS, CONTACT THE WALMART CONSTRUCTION MANAGER AND THE ARCHITECT IMMEDIATELY TO DETERMINE WHAT ACTION SHOULD BE TAKEN TO MATCH EXISTING CONDITIONS.
3. ALL UTILITY LOCATIONS SHOWN ARE APPROXIMATE. THE CONTRACTOR SHALL FIELD VERIFY THE EXACT LOCATION OF ALL EXISTING UTILITIES (WHETHER SHOWN OR NOT) PRIOR TO THE SUBMISSION OF HIS BID OR THE COMMENCEMENT OF CONSTRUCTION. THE CONTRACTOR SHALL NOTIFY THE WALMART CONSTRUCTION MANAGER AND THE ARCHITECT OF THE DISCOVERY OF EXISTING UTILITIES NOT SHOWN OR NOTED ON THE DRAWINGS.
4. THE CONTRACTOR SHALL VERIFY EXACT LOCATIONS AND DEPTHS OF UNDERGROUND UTILITY SERVICES PRIOR TO ANY EXCAVATION.
5. REPORT ANY DISCREPANCIES FOUND IN THE FIELD IMMEDIATELY TO WALMART AND THE ARCHITECT PRIOR TO MAKING ANY MODIFICATIONS OR ORDERING OF ANY MATERIALS.

DEMOLITION NOTES

1. CONTRACTOR RESPONSIBLE FOR ALL JOBSITE SAFETY AND COMPLIANCE WITH OSHA REGULATIONS. CONTRACTOR WILL INSTALL TEMPORARY WALL, DUST BARRICADES AND CONSTRUCTION BARRIERS AND TAKE ALL PRECAUTIONS TO PROTECT CUSTOMERS AND ASSOCIATES FROM CONSTRUCTION OPERATIONS.
2. THE CONTRACTOR SHALL FIELD VERIFY THE EXTENT OF DEMOLITION. IF DISCREPANCIES ARE FOUND, CONTACT THE ARCHITECT AND WALMART CONSTRUCTION MANAGER.
3. WHEN UTILITIES ARE REMOVED, CAP AND SEAL A MINIMUM OF 8" BELOW FINISH FLOOR OR A MINIMUM OF 6" ABOVE FINISH CEILING.
4. SAW CUTTING OF EXISTING CONCRETE WILL BE COORDINATED WITH STORE MANAGER FOR APPROPRIATE HOURS TO MINIMIZE CUSTOMERS DISTURBANCE. NO JACKHAMMERS ARE ALLOWED.
5. GENERAL CONTRACTOR IS RESPONSIBLE FOR REMOVAL OF CONSTRUCTION WASTE AND DEBRIS. DO NOT USE STORE DUMPSTERS. PREVENT CUSTOMERS AND ASSOCIATES FROM CONTACT WITH CONSTRUCTION WASTE.
6. COORDINATE LOCATION OF DUMPSTER ON SITE WITH WALMART CM.

BUILDING CODE SUMMARY

NAME OF PROJECT	BATAVIA STORE # 2088
STREET ADDRESS	4133 VETERANS MEMORIAL DR. BATAVIA, NY 14020
STORE MANAGER	DIANE WATERS
PROPOSED USE	RETAIL

CODES

BUILDING CODE	2015 INTERNATIONAL BUILDING CODE WITH THE 2017 NY SUPPLEMENT
MECHANICAL CODE	2015 INTERNATIONAL MECHANICAL CODE WITH THE 2017 NY SUPPLEMENT
PLUMBING CODE	2015 INTERNATIONAL PLUMBING CODE WITH THE 2017 NY SUPPLEMENT
ELECTRICAL CODE	2014 NATIONAL ELECTRICAL CODE
FIRE CODE	2015 INTERNATIONAL FIRE CODE WITH THE 2017 NY SUPPLEMENT
ENERGY CONSERVATION CODE	2015 INTERNATIONAL ENERGY CONSERVATION CODE WITH THE 2016 NY SUPPLEMENT
ACCESSIBILITY CODE	A117.1 2015

OCCUPANCY

M: MERCANTILE (WHOLESALE OR RETAIL STORE (MAIN USE))	SECTION 309.1

TYPE OF CONSTRUCTION
VB UNPROTECTED (SPRINKLERED) — PER SECTION 602.5 AND TABLES 601 AND 602

ALLOWABLE AREA
UNLIMITED — SECTION 507.1 SECTION 507.3

FIRE PROTECTION
BUILDING IS EQUIPPED THROUGHOUT WITH AN AUTOMATIC SPRINKLER SYSTEM AND IS SURROUNDED ON ALL SIDES BY 60 FEET MINIMUM OF PERMANENT OPEN SPACE AND COMPLIES WITH SECTION 507.3 (UNLIMITED AREA CRITERIA IS APPLICABLE.

VICINITY MAP

N.T.S.

GENERAL SCOPE OF WORK

- NEW PICKUP CANOPY
- PARKING STRIPING
- NEW ACCESS STRIPING
- NEW DIRECTIONAL SIGNAGE IN PARKING LOT
- NEW PICKUP SIGNAGE & EXT. BRANDING AT BLDG. CORNER
- NEW INTERIOR PICKUP EQUIPMENT AND FINISHES

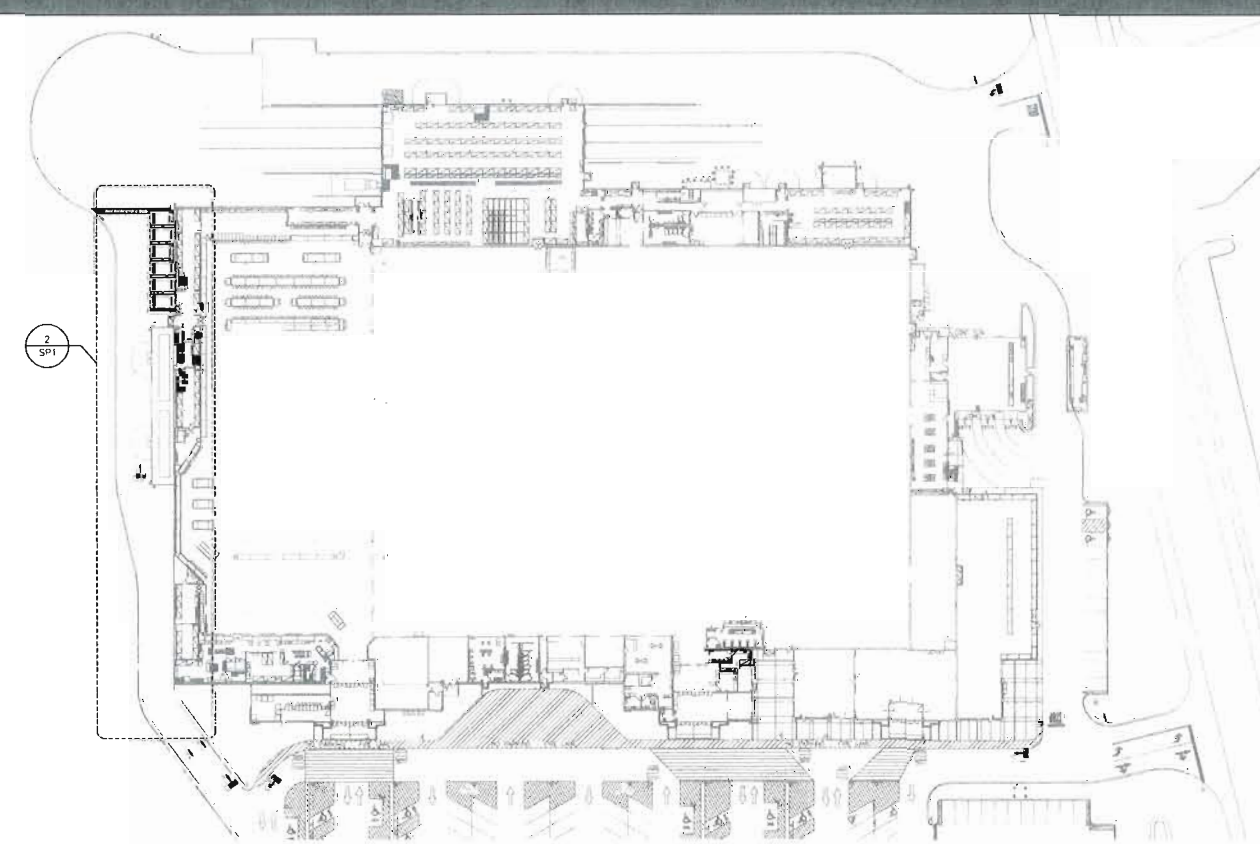

1 KEY PLAN
1" = 50'-0"
NORTH

ARCHITECTURAL:	ELECTRICAL:	STRUCTURAL:
PERRY M. PETRILLO ARCHITECTS, PC PERRY M. PETRILLO 9 PARK AVENUE PARK RIDGE, NJ 07656 201.307.6153	MPW ENGINEERING, LLC. 110 W. 7TH STREET, STE. 600 TULSA, OK 74119 918.582.4088	WALLACE ENGINEERING STRUCTURAL CONSULTANTS, INC 200 EAST MATHEW BRADY STREET TULSA, OK 74103 918.584.5858

Walmart

Walmart

Walmart

PERRY M. PETRILLO ARCHITECTS, PC
9 Park Avenue
Park Ridge, NJ 07656
Telephone: 201-307-6153
Facsimile: 201-307-6155
LICENSE:
NEW YORK
024375-1

STIPULATION FOR REUSE
THIS DRAWING WAS PREPARED FOR USE ON A SPECIFIC SITE AT BATAVIA, NY CONTEMPORANEOUSLY WITH ITS ISSUE DATE ON 02/07/18 AND IS NOT SUITABLE FOR USE ON A DIFFERENT PROJECT SITE OR AT A LATER TIME. USE OF THIS DRAWING FOR REFERENCE OR EXAMPLE ON ANOTHER PROJECT REQUIRES THE SERVICES OF PROPERLY LICENSED ARCHITECTS AND ENGINEERS. REPRODUCTION OF THIS DRAWING FOR REUSE ON ANOTHER PROJECT IS NOT AUTHORIZED AND MAY BE CONTRARY TO THE LAW.

CONSULTANTS

Walmart
BATAVIA, NY
STORE NO. 2088
JOB NUMBER: 17.198
PROTO: (LOW CAP CANOPY)

ISSUE BLOCK

CHECKED BY:	LM
DRAWN BY:	MZ
PROTO CYCLE:	11/14/17
DOCUMENT DATE:	02/07/18

REGISTERED ARCHITECT
PERRY MITCHELL PETRILLO
No. 024375
STATE OF NEW YORK

APR 02 2018

COVER SHEET

SHEET:
C1

ARCHITECTURAL FINISH FLOOR = 100.00'

NOTE:
FINISH FLOOR ELEVATION AT ALL EXTERIOR DOORS = 100.00' UNLESS NOTED OTHERWISE

REFER TO SPEC SECTION 01500 FOR DETAILS AND REQUIREMENTS FOR STORMWATER POLLUTION CONTROLS AND SITE STORAGE OF MATERIALS AND EQUIPMENT. DEVIATION(S) FROM DETAILS SHOWN MUST BE SUBMITTED FOR APPROVAL IN ACCORDANCE WITH SPEC SECTION 01330.

SIGNAGE NOTES

1. REF SP1.1 FOR POLE DETAILS AND SIGNAGE DETAILS

SIGNAGE LEGEND

DIRECTIONAL SIGN REF 2 & 5–SP1.1 — IS — SIGN ARROW DIRECTION
L= LEFT
R= RIGHT
S=STRAIGHT

CANOPY GENERAL NOTES

FABRIC
1. CANOPY FURNISHED AND INSTALLED BY WALMART / CANOPY VENDOR.
2. LIGHT FIXTURES TO BE FURNISHED BY VENDOR AND INSTALLED BY G.C.
3. FOOTINGS TO BE INSTALLED BY WALMART / CANOPY VENDOR AND DESIGNED BY WALMART STRUCTURAL ENGINEER.
4. CANOPY TO BE PREFINISHED TO MATCH P126 BY VENDOR. UNLESS NOTED OTHERWISE.
5. ELECTRICAL FOR LIGHTS BY G.C.

KEYNOTE LEGEND

16.902	EXTERIOR SIGN POWER. WHERE ELECTRICAL CONNECTIONS FOR SIGNAGE OCCUR BELOW ROOF LINE, MOUNT JUNCTION BOXES TO WALL AT SIGN CONNECTION POINT AND PROVIDE 3/4" CONDUIT TO CONTROL BOX FOR LOW VOLTAGE WIRING (INSTALLED BY OTHERS). REFER TO ARCHITECTURAL DRAWINGS FOR EXACT SIGN LOCATION(S) PRIOR TO INSTALLATION. WHERE ELECTRICAL CONNECTIONS FOR SIGNAGE OCCUR ABOVE ROOF LINE, PROVIDE UNISTRUT TO MOUNT JUNCTION BOXES TO BACK SIDE OF PARAPET AND PROVIDE 3/4" CONDUIT TO CONTROL BOX FOR LOW VOLTAGE WIRING (INSTALLED BY OTHERS). PROVIDE ONLY ONE PENETRATION THROUGH THE ROOF. REF ARCHITECTURAL EXTERIOR WALL SECTIONS AND SIGN ATTACHMENT FOR ROOF AND PARAPET PENETRATION REQUIREMENTS.

DIRECTIONAL SIGN SCHEDULE

ARROW	NUMBER	MOUNTING TYPE
Directional Left	2	Pole
Directional Right	1	Pole
Directional Straight	2	Pole

SIGNAGE GENERAL NOTES

1. CANOPY AND BUILDING SIGNAGE FURNISHED BY WALMART, INSTALLED BY OTHERS. SITE DIRECTIONAL PLACARDS FURNISHED BY WALMART, INSTALLED BY G.C.; POLE FURNISHED AND INSTALLED BY G.C. PAVEMENT PAINT FURNISHED AND INSTALLED BY G.C.
2. GENERAL CONTRACTOR RESPONSIBILITIES:
   A. REMOVE EXISTING BUILDING SIGNAGE AS INDICATED.
   B. BY END OF FIRST WEEK OF CONSTRUCTION, REVIEW EXISTING CONSTRUCTION WHERE SIGN(S) WILL BE INSTALLED. IF EXISTING CONDITIONS DO NOT MATCH SIGN ATTACHMENT DETAILS SHOWN, REQUEST APPROVAL FROM CONSTRUCTION MANAGER TO SUBMIT RFI IN ACCORDANCE WITH SECTION 01255. NOTE DIFFERENCES IN CONSTRUCTION, INCLUDING DIMENSIONS, AND INCLUDE PHOTOGRAPHS FOR CLARIFICATION.
   C. PROVIDE JUNCTION BOXES AND CIRCUITRY TO NEW "Pickup" AND "spark" SIGNAGE.
   D. VERIFY VOLTAGE AT CIRCUITS FEEDING LIGHTED SIGNAGE. REFER TO ELECTRICAL.
   E. MAKE FINAL TERMINATIONS ON LIGHTED SIGNAGE.
   F. INSTALL CHECK-IN KIOSKS & COORDINATE W/ VENDOR.
   G. FOR SPECIAL PROJECTS, WHEN REQUIRED BY AHJ, G.C. IS RESPONSIBLE TO ACQUIRE SEPARATE PERMIT(S) FOR INSTALLATION OF SITE SIGNS. FOR REM PROJECTS, FOLLOW REM SIGN STANDARDS FOR PERMITS AND INSTALLATION.
   H. ALL SIGN PLACARDS FURNISHED BY WALMART AND INSTALLED BY GENERAL CONTRACTOR. ALL PAINT FOR PAVEMENT MARKINGS ARE SUPPLIED AND PAINTED BY THE GENERAL CONTRACTOR.
3. SIGNAGE CONTRACTOR RESPONSIBILITIES:
   A. FURNISH SPECIFIED CONDUIT FOR LIGHTED SIGNAGE.
   B. MAKE REQUIRED EXTERIOR WALL PENETRATIONS, INSTALL CONDUIT, AND SEAL PENETRATIONS PER SPECIFICATION SECTION 07900.
   C. INSTALL SIGNAGE PER DETAILS ON THE A-2 SHEET.

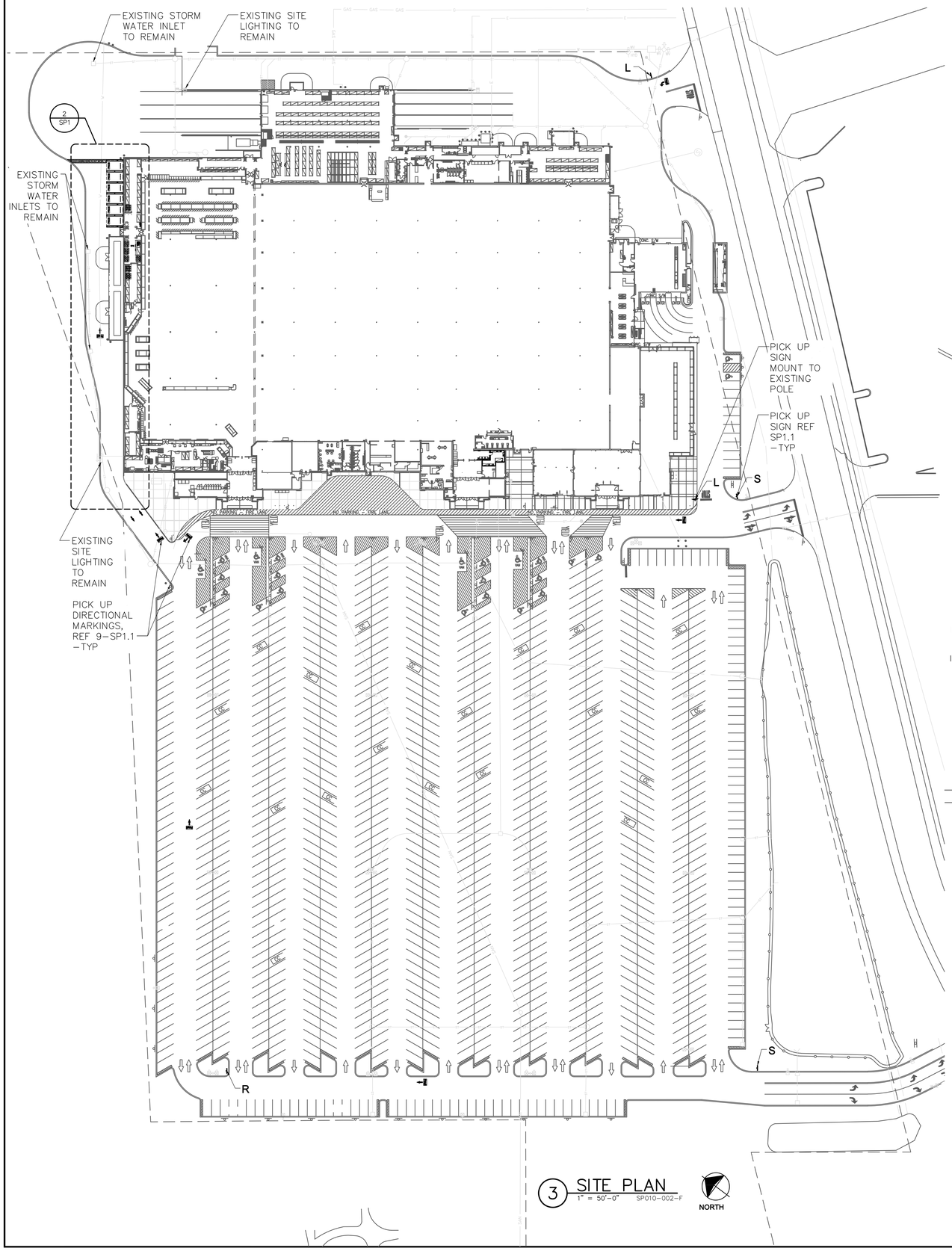

3 SITE PLAN
1" = 50'–0" SP010–002–F
NORTH

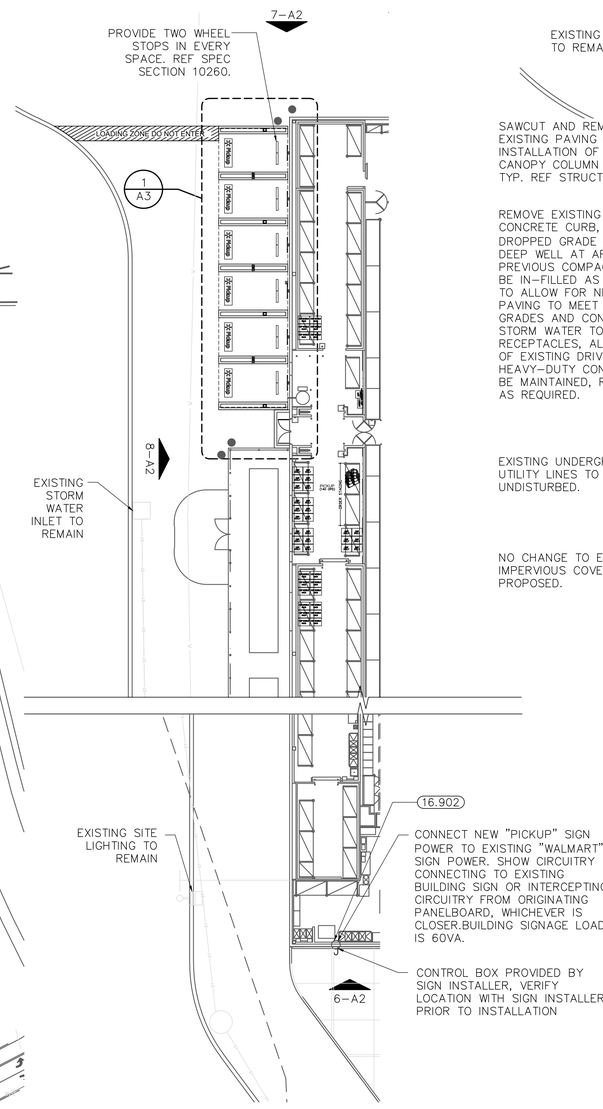

2 ENLARGED SITE PLAN
1/16"=1'–0"
NORTH

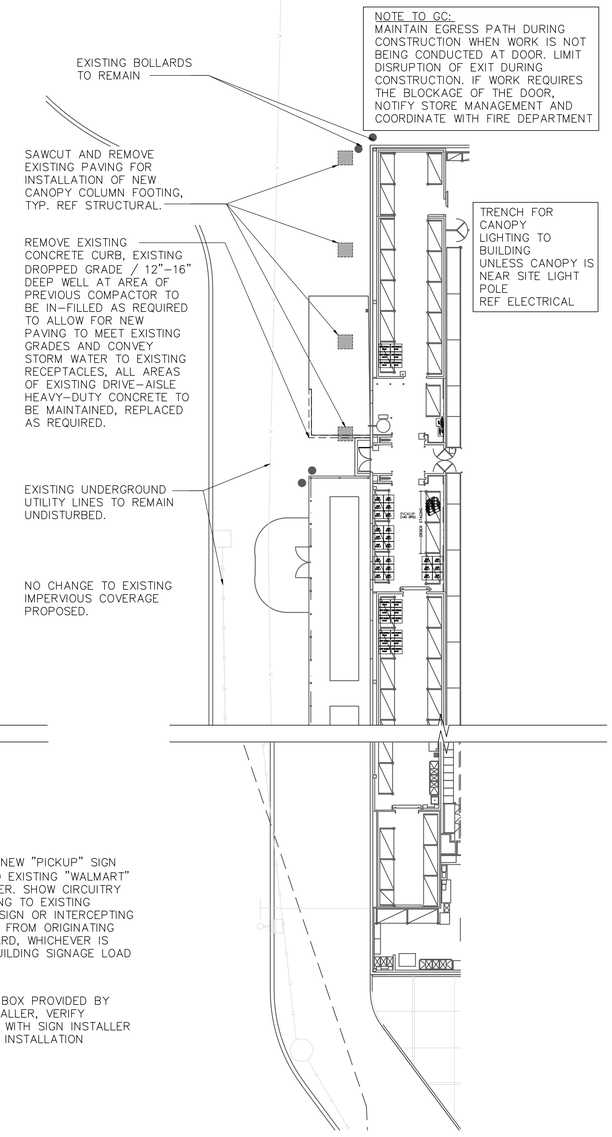

1 DEMOLITION SITE PLAN
1/16"=1'–0"
NORTH

PERRY M. PETRILLO ARCHITECTS, PC
9 Park Avenue
Park Ridge, NJ 07656
Telephone (201) 307-6153
Facsimile (201) 307-6158
LICENSE:
NEW YORK
024370-1

STIPULATION FOR REUSE

THIS DRAWING WAS PREPARED FOR USE ON A SPECIFIC SITE AT BATAVIA, NY. IT IS NOT INTENDED FOR REUSE ON OTHER PROJECTS OR AT OTHER SITES. IF THIS OR A SIMILAR CIRCUMSTANCE ARISES IN THE FUTURE, THE ORIGINAL PROJECT ARCHITECT AND OTHER PROJECT REQUIRES THE ORIGINAL PROJECT ARCHITECT'S PERMISSION TO REUSE THEIR DRAWINGS. ARCHITECTS AND ENGINEERS ASSUME NO RESPONSIBILITY FOR REUSE ON ANOTHER PROJECT IS NOT INTENDED OR PLANNED, AND ANY REUSE IS ENTIRELY AT THE USER'S OWN RISK.

CONSULTANTS

Walmart

BATAVIA, NY
STORE NO.2088

JOB NUMBER: 17.198 PROTO: (LOW CAP CANOPY)

ISSUE BLOCK

CHECKED BY:	LM
DRAWN BY:	MZ
PROTO CYCLE:	11/14/17
DOCUMENT DATE:	02/07/18

SITE PLAN AND DEMOLITION SITE PLAN

SHEET: SP1

FINISH LEGEND

P126U	KNOCKOUT ORANGE SW#6885 (URETHANE)

CANOPY GENERAL NOTES

FABRIC
1. CANOPY FURNISHED AND INSTALLED BY WALMART / CANOPY VENDOR.
2. LIGHT FIXTURES TO BE FURNISHED BY VENDOR AND INSTALLED BY G.C.
3. FOOTINGS TO BE INSTALLED BY WALMART / CANOPY VENDOR AND DESIGNED BY WALMART STRUCTURAL ENGINEER.
4. CANOPY TO BE PREFINISHED TO MATCH P126 BY VENDOR. UNLESS NOTED OTHERWISE.
5. ELECTRICAL FOR LIGHTS BY G.C.

SIGNAGE GENERAL NOTES

1. CANOPY AND BUILDING SIGNAGE FURNISHED BY WALMART, INSTALLED BY OTHERS. SITE DIRECTIONAL PLACARDS FURNISHED BY WALMART, INSTALLED BY G.C.; POLE FURNISHED AND INSTALLED BY G.C. PAVEMENT PAINT FURNISHED AND INSTALLED BY G.C.
2. GENERAL CONTRACTOR RESPONSIBILITIES:
   - A. REMOVE EXISTING BUILDING SIGNAGE AS INDICATED.
   - B. BY END OF FIRST WEEK OF CONSTRUCTION, REVIEW EXISTING CONSTRUCTION WHERE SIGN(S) WILL BE INSTALLED. IF EXISTING CONDITIONS DO NOT MATCH SIGN ATTACHMENT DETAILS SHOWN, REQUEST APPROVAL FROM CONSTRUCTION MANAGER TO SUBMIT RFI IN ACCORDANCE WITH SECTION 01255. NOTE DIFFERENCES IN CONSTRUCTION, INCLUDING DIMENSIONS, AND INCLUDE PHOTOGRAPHS FOR CLARIFICATION.
   - C. PROVIDE JUNCTION BOXES AND CIRCUITRY TO NEW "Pickup" AND "spark" SIGNAGE.
   - D. VERIFY VOLTAGE AT CIRCUITS FEEDING LIGHTED SIGNAGE. REFER TO ELECTRICAL.
   - E. MAKE FINAL TERMINATIONS ON LIGHTED SIGNAGE.
   - F. INSTALL CHECK-IN KIOSKS & COORDINATE W/ VENDOR.
   - G. FOR SPECIAL PROJECTS, WHEN REQUIRED BY AHJ, G.C. IS RESPONSIBLE TO ACQUIRE SEPARATE PERMIT(S) FOR INSTALLATION OF SITE SIGNS. FOR REM PROJECTS, FOLLOW REM SIGN STANDARDS FOR PERMITS AND INSTALLATION.
   - H. ALL SIGN PLACARDS FURNISHED BY WALMART AND INSTALLED BY GENERAL CONTRACTOR. ALL PAINT FOR PAVEMENT MARKINGS ARE SUPPLIED AND PAINTED BY THE GENERAL CONTRACTOR.
3. SIGNAGE CONTRACTOR RESPONSIBILITIES:
   - A. FURNISH SPECIFIED CONDUIT FOR LIGHTED SIGNAGE.
   - B. MAKE REQUIRED EXTERIOR WALL PENETRATIONS, INSTALL CONDUIT, AND SEAL PENETRATIONS PER SPECIFICATION SECTION 07900.
   - C. INSTALL SIGNAGE PER DETAILS ON THIS SHEET.

EXISTING SIGNAGE SCHEDULE

SIGNAGE LOCATION	QTY	LIGHTED	COLOR	SIZE	INDIVIDUAL AREA		TOTAL AREA	
FRONT SIGNAGE								
Walmart	1	LED	WHITE	5'-6"				
Spark	1	LED	YELLOW	8'-0"	298.00	SF	298.00	SF
Market	1	N/A	WHITE	2'-6"	28.17	SF	28.17	SF
Home & Pharmacy	1	N/A	WHITE	2'-6"	97.66	SF	97.66	SF
Outdoor Living	1	N/A	WHITE	2'-6"	77.17	SF	77.17	SF
Auto Center->	1	N/A	WHITE	2'-0"	34.50	SF	34.50	SF
TOTAL FRONT SIGNAGE							535.50	SF
AUTO CENTER SIGNAGE								
Walmart	1	LED	WHITE	4'-6"				
Spark	1	LED	YELLOW	6'-6 9/16"	199.54	SF	199.54	SF
Auto Center	1	N/A	WHITE	2'-0"	31.47	SF	31.47	SF
Tire	2	N/A	WHITE	1'-0"	2.38	SF	4.76	SF
Lube	1	N/A	WHITE	1'-0"	3.13	SF	3.13	SF
TOTAL AUTO CENTER SIGNAGE							238.90	SF
TOTAL BUILDING SIGNAGE							774.40	SF

NEW SIGNAGE SCHEDULE

SIGNAGE LOCATION		QTY	LIGHTED	COLOR	SIZE	INDIVIDUAL AREA		TOTAL AREA	
FRONT SIGNAGE									
Walmart	(EXISTING)	1	LED	WHITE	5'-6"				
Spark	(EXISTING)	1	LED	YELLOW	8'-0"	298.00	SF	298.00	SF
Market	(EXISTING)	1	N/A	WHITE	2'-6"	28.17	SF	28.17	SF
Home & Pharmacy	(EXISTING)	1	N/A	WHITE	2'-6"	97.66	SF	97.66	SF
Outdoor Living	(EXISTING)	1	N/A	WHITE	2'-6"	77.17	SF	77.17	SF
Auto Center->	(EXISTING)	1	N/A	WHITE	2'-0"	34.50	SF	34.50	SF
Pickup		1	LED	WHITE	2'-6'	66.68	SF	66.68	SF
* (Spark)	(NEW)	1	LED	YELLOW	4'-4 1/4"				
TOTAL FRONT SIGNAGE								602.18	SF
AUTO CENTER SIGNAGE									
Walmart	(EXISTING)	1	LED	WHITE	4'-6"				
Spark	(EXISTING)	1	LED	YELLOW	6'-6 9/16"	199.54	SF	199.54	SF
Auto Center	(EXISTING)	1	N/A	WHITE	2'-0"	31.47	SF	31.47	SF
Tire	(EXISTING)	2	N/A	WHITE	1'-0"	2.38	SF	4.76	SF
Lube	(EXISTING)	1	N/A	WHITE	1'-0"	3.13	SF	3.13	SF
TOTAL AUTO CENTER SIGNAGE								238.90	SF
TOTAL BUILDING SIGNAGE								841.08	SF

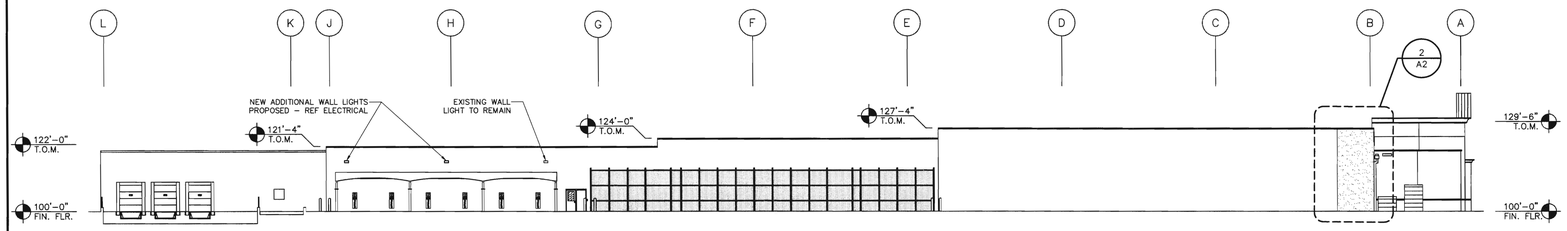

8 LEFT ELEVATION
1"=20'-0"

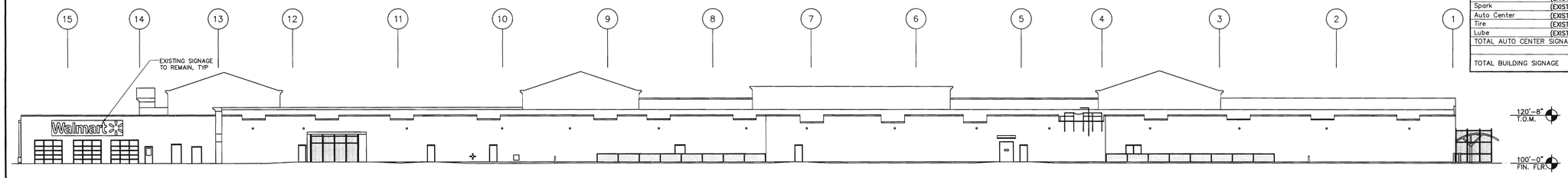

7 REAR ELEVATION
1"=20'-0"

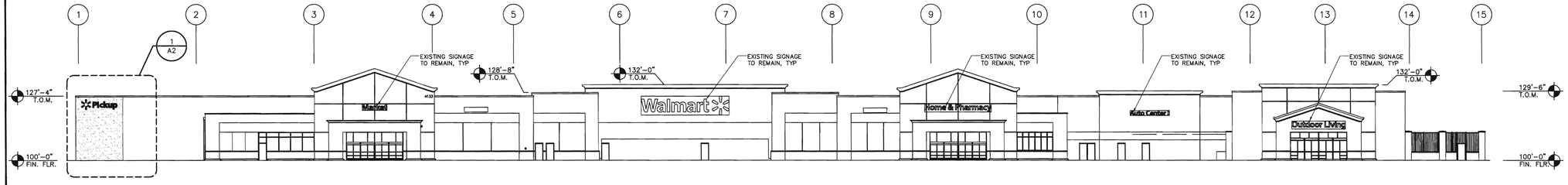

6 FRONT ELEVATION
1"=20'-0"

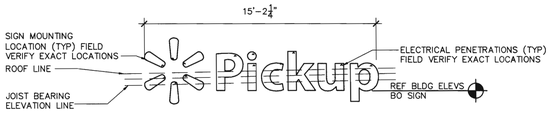

NOTE:
ALL SIGN PENETRATIONS ABOVE ROOF LEVEL MUST BE A CLEAR MINIMUM OF 8" ABOVE DECK

NOTE TO SIGN INSTALLER:
ALL PRIMARY MOUNTING HOLES MUST BE UTILIZED. IF MOUNTING THROUGH PRIMARY HOLE IS OBSTRUCTED BY REBAR, METAL STUDS, CHANNELS, OR OTHER MISC METAL, SEAL PRIMARY HOLE IN SIGN CAN AND MOUNT THROUGH THE NEAREST ALTERNATE MOUNTING HOLE. PRIMARY HOLES ARE INDICATED WITH PREDRILLED HOLES THROUGH WASHERS. ALTERNATE HOLES ARE INDICATED WITH WASHERS ONLY OR ARE OTHERWISE MARKED.

5 PICKUP SIGNAGE 2'-6"
1/4" = 1'-0"

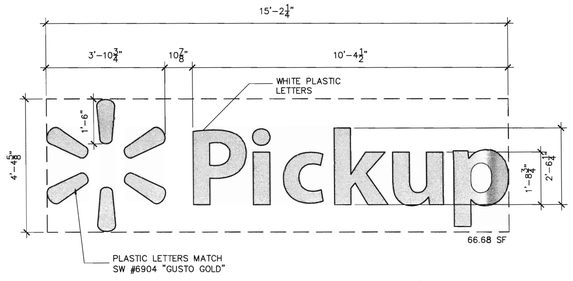

4 BUILDING PICKUP SIGNAGE 2'-6"
1/2" = 1'-0"

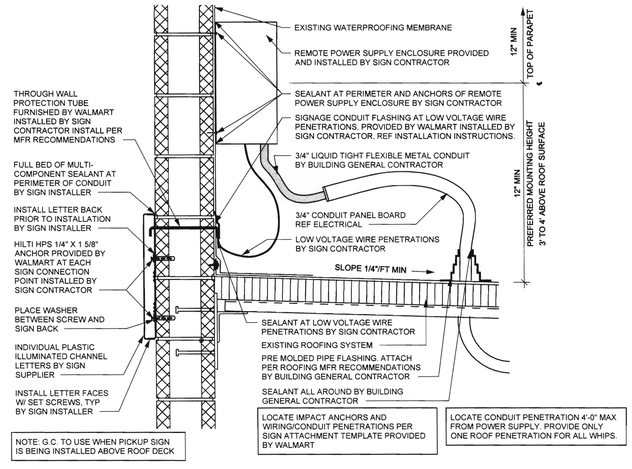

NOTE: G.C. TO USE WHEN PICKUP SIGN IS BEING INSTALLED ABOVE ROOF DECK

LOCATE IMPACT ANCHORS AND WIRING/CONDUIT PENETRATIONS PER SIGN ATTACHMENT TEMPLATE PROVIDED BY WALMART

LOCATE CONDUIT PENETRATION 4'-0" MAX FROM POWER SUPPLY. PROVIDE ONLY ONE ROOF PENETRATION FOR ALL WHIPS.

3 SIGNAGE ATTACHMENT
1 1/2"=1'-0"

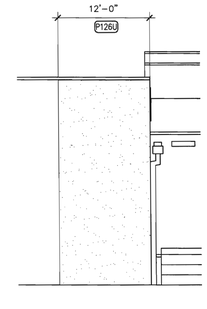

2 BUILDING SIDE ELEVATION
1/8"=1'-0"

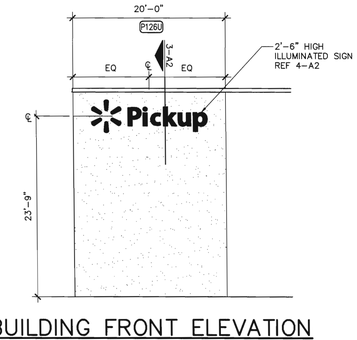

1 BUILDING FRONT ELEVATION
1/8"=1'-0"

PERRY M. PETRILLO ARCHITECTS, PC
9 Park Avenue
Park Ridge, NJ 07656
Telephone (201) 307-6153
Facsimile (201) 307-6158
LICENSE:
NEW YORK: 024275-1

STIPULATION FOR REUSE

THIS DRAWING WAS PREPARED FOR USE ON THE SPECIFIC PROJECT IN NEW CANAAN, CONNECTICUT, WITH ITS INTENDED USE, AND IS NOT SUITABLE FOR USE ON A SUBSEQUENT PROJECT. ALTERATIONS TO THIS DRAWING, OR REPRODUCTION OF THIS DRAWING FOR USE ON ANOTHER PROJECT, REQUIRES THE WRITTEN CONSENT OF PERRY M. PETRILLO ARCHITECTS, PC. REPRODUCTION OF THIS DRAWING FOR USE ON ANOTHER PROJECT IS NOT AUTHORIZED AND MAY BE CONTRARY TO THE LAW.

CONSULTANTS

Walmart
BATAVIA, NY
STORE NO.2088
JOB NUMBER: 17.180 | PROTO: (LOW CAP CANOPY)

ISSUE BLOCK

CHECKED BY:	LM
DRAWN BY:	MZ
PROTO CYCLE:	11/14/17
DOCUMENT DATE:	02/07/18

REGISTERED ARCHITECT PERRY M. PETRILLO NO. 024275 STATE OF NEW YORK

APR 02 2018

BUILDING ELEVATIONS AND SECTIONS

SHEET: A2

FINISH LEGEND	
P5	OSHA STANDARD "SAFETY YELLOW"
P101	GUSTO GOLD SW#6904
P126	KNOCKOUT ORANGE SW#6885

CANOPY GENERAL NOTES

FABRIC
1. CANOPY FURNISHED AND INSTALLED BY WALMART / CANOPY VENDOR.
2. LIGHT FIXTURES TO BE FURNISHED BY VENDOR AND INSTALLED BY G.C.
3. FOOTINGS TO BE INSTALLED BY WALMART / CANOPY VENDOR AND DESIGNED BY WALMART STRUCTURAL ENGINEER.
4. CANOPY TO BE PREFINISHED TO MATCH P126 BY VENDOR. UNLESS NOTED OTHERWISE.
5. ELECTRICAL FOR LIGHTS BY G.C.

SIGNAGE GENERAL NOTES

1. CANOPY AND BUILDING SIGNAGE FURNISHED BY WALMART, INSTALLED BY OTHERS. SITE DIRECTIONAL PLACARDS FURNISHED BY WALMART, INSTALLED BY G.C.; POLE FURNISHED AND INSTALLED BY G.C. PAVEMENT PAINT FURNISHED AND INSTALLED BY G.C.
2. GENERAL CONTRACTOR RESPONSIBILITIES:
   - A. REMOVE EXISTING BUILDING SIGNAGE AS INDICATED.
   - B. BY END OF FIRST WEEK OF CONSTRUCTION, REVIEW EXISTING CONSTRUCTION WHERE SIGN(S) WILL BE INSTALLED. IF EXISTING CONDITIONS DO NOT MATCH SIGN ATTACHMENT DETAILS SHOWN, REQUEST APPROVAL FROM CONSTRUCTION MANAGER TO SUBMIT RFI IN ACCORDANCE WITH SECTION 01255. NOTE DIFFERENCES IN CONSTRUCTION, INCLUDING DIMENSIONS, AND INCLUDE PHOTOGRAPHS FOR CLARIFICATION.
   - C. PROVIDE JUNCTION BOXES AND CIRCUITRY TO NEW "Pickup" AND "spark" SIGNAGE.
   - D. VERIFY VOLTAGE AT CIRCUITS FEEDING LIGHTED SIGNAGE. REFER TO ELECTRICAL.
   - E. MAKE FINAL TERMINATIONS ON LIGHTED SIGNAGE.
   - F. INSTALL CHECK-IN KIOSKS & COORDINATE W/ VENDOR.
   - G. FOR SPECIAL PROJECTS, WHEN REQUIRED BY AHJ, G.C. IS RESPONSIBLE TO ACQUIRE SEPARATE PERMIT(S) FOR INSTALLATION OF SITE SIGNS. FOR REM PROJECTS, FOLLOW REM SIGN STANDARDS FOR PERMITS AND INSTALLATION.
   - H. ALL SIGN PLACARDS FURNISHED BY WALMART AND INSTALLED BY GENERAL CONTRACTOR. ALL PAINT FOR PAVEMENT MARKINGS ARE SUPPLIED AND PAINTED BY THE GENERAL CONTRACTOR.
3. SIGNAGE CONTRACTOR RESPONSIBILITIES:
   - A. FURNISH SPECIFIED CONDUIT FOR LIGHTED SIGNAGE.
   - B. MAKE REQUIRED EXTERIOR WALL PENETRATIONS, INSTALL CONDUIT, AND SEAL PENETRATIONS PER SPECIFICATION SECTION 07900.
   - C. INSTALL SIGNAGE PER DETAILS ON THE A-2 SHEET.

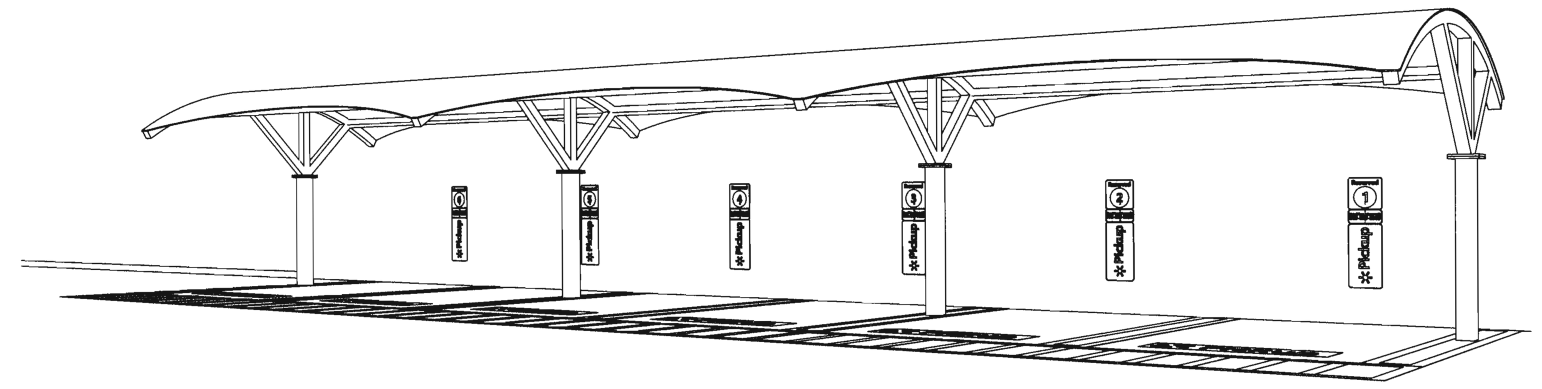

4 CANOPY PERSPECTIVE– CURVED FABRIC

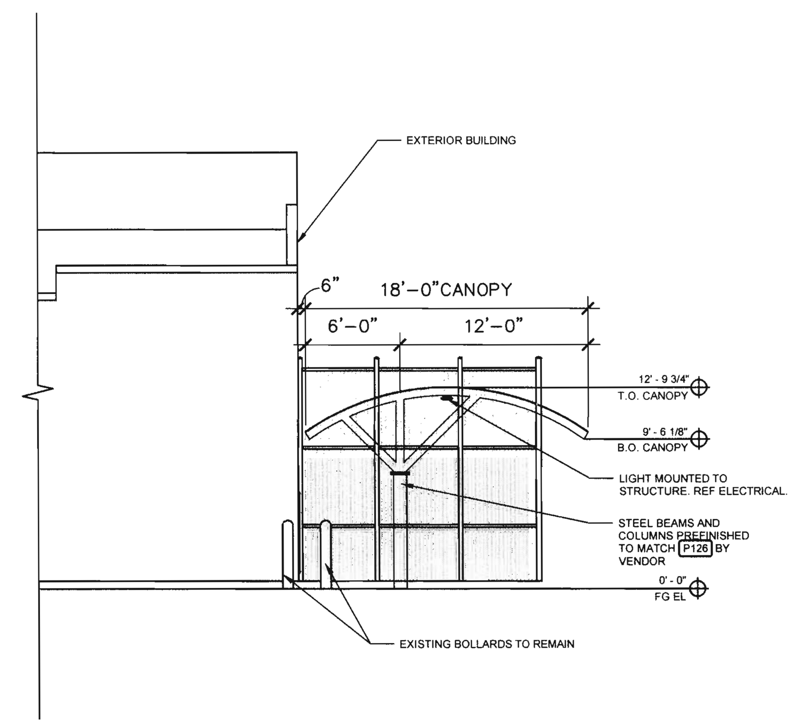

3 CANOPY ELEVATION – CURVED FABRIC
1/8"=1'-0"

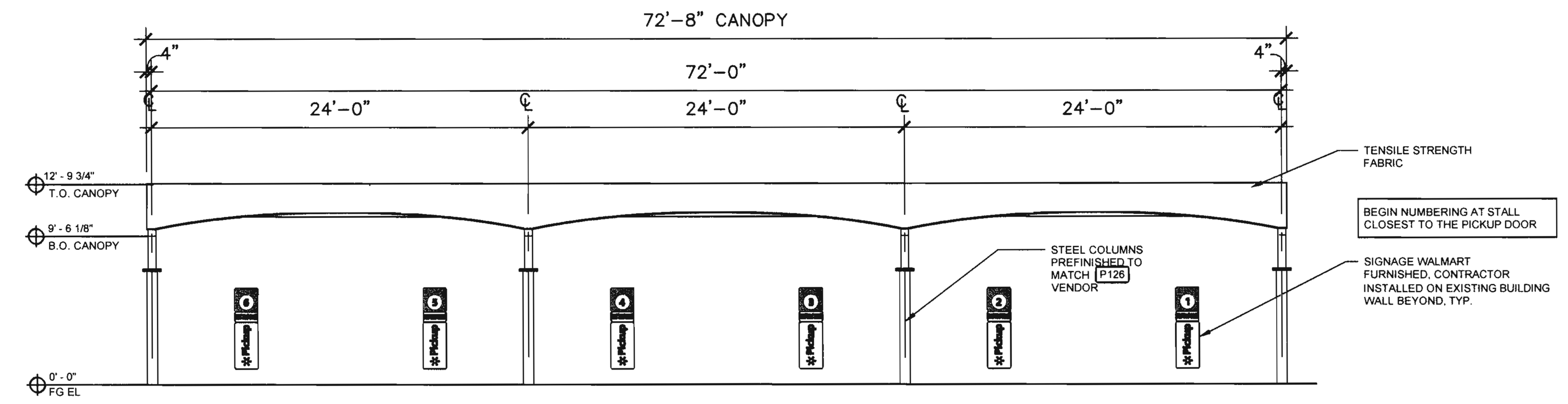

2 CANOPY ELEVATION – CURVED FABRIC
1/8"=1'-0"

G.C. TO ORDER SIGN STENCILS FROM JONATHON THOMPSON AT OUTLINE INDUSTRIES OR CALL 1.800.STENCILS

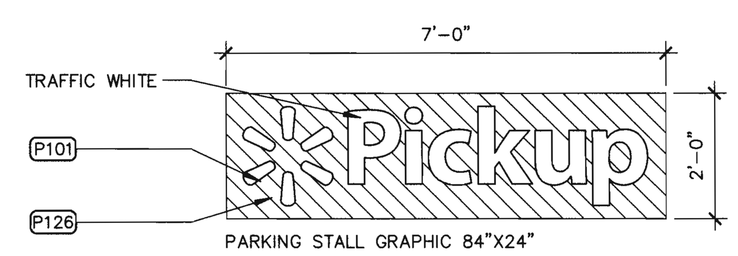

6 PARKING STALL PAVEMENT GRAPHIC
1/2"=1'-0"

G.C. TO ORDER SIGN STENCILS FROM JONATHON THOMPSON AT OUTLINE INDUSTRIES OR CALL 1.800.STENCILS

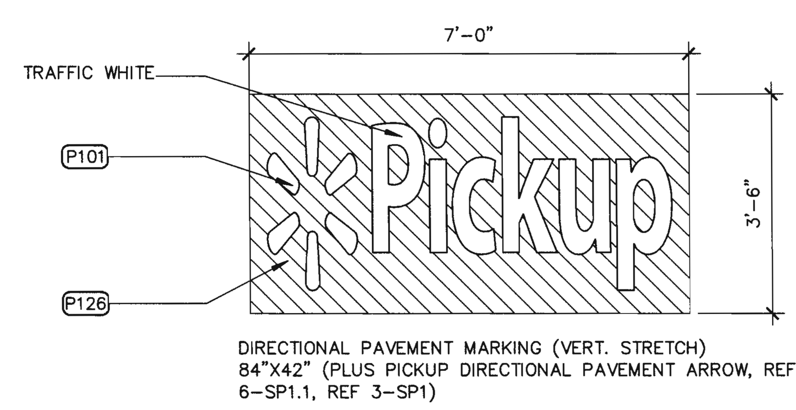

5 DIRECTIONAL PAVEMENT MARKING
1/2"=1'-0"

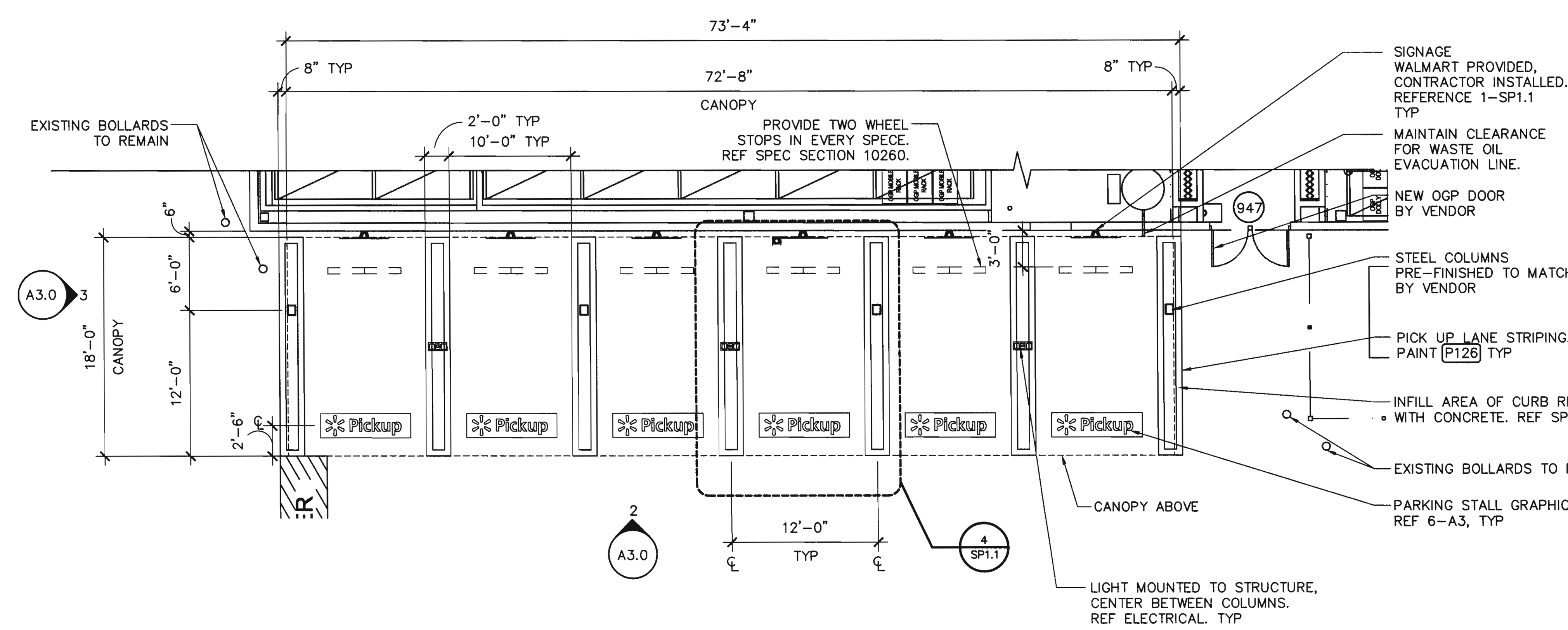

1 CANOPY SITE PLAN– CURVED FABRIC
1/8"=1'-0"

PERRY M. PETRILLO ARCHITECTS, PC
9 Park Avenue
Park Ridge, NJ 07656
Telephone (201) 307-6153
Facsimile (201) 307-6158
LICENSE:
NEW YORK
024375-1

STIPULATION FOR REUSE
THIS DRAWING WAS PREPARED FOR USE ON A SPECIFIC SITE AT BATAVIA, NY CONTEMPORANEOUSLY WITH ITS ISSUE DATE ON 02/07/18 AND IT IS NOT SUITABLE FOR USE ON A DIFFERENT PROJECT SITE OR AT A LATER TIME. USE OF THIS DRAWING FOR REFERENCE OR EXAMPLE ON ANOTHER PROJECT REQUIRES THE SERVICES OF PROPERLY LICENSED ARCHITECTS AND ENGINEERS. REPRODUCTION OF THIS DRAWING FOR REUSE ON ANOTHER PROJECT IS NOT AUTHORIZED AND MAY BE CONTRARY TO THE LAW.

CONSULTANTS

Walmart
BATAVIA, NY
STORE NO.2088
JOB NUMBER: 17.198
PROTO: (LOW CAP CANOPY)

ISSUE BLOCK

CHECKED BY:	LM
DRAWN BY:	MZ
PROTO CYCLE:	11/14/17
DOCUMENT DATE:	02/07/18

APR 02 2018

CURVED FABRIC CANOPY

SHEET: A3.0

T-09-BAT-4-18

04/20/2016