GENESEE COUNTY PLANNING BOARD
ZONING REFERRALS NOTICE OF FINAL ACTION

GCDP Referral ID	**C-18-BAT-5-15**
Review Date	**5/14/2015**
Municipality	**BATAVIA, C.**
Board Name	**CITY PLANNING AND DEVELOPMENT COMM.**
Applicant's Name	**Ronald Viele (developer for Arby's)**
Referral Type	**Special Use Permit**
Variance(s)	**Area Variance(s)**
Description:	**Special Use Permit, Special Sign Permits, Sign Permits and 14 Area Variances for a new drive-in restaurant (Arby's).** **Area Variances for landscape buffers between commercial and residential properties, front yard parking buffer, building height, driveway width, driveway location, distance to public garage, and number of parking spaces.**
Location	**316-320 W. Main St. (NYS Rts. 5 & 63), Batavia**
Zoning District	**General Commercial (C-2) District**

PLANNING BOARD DECISION

DISAPPROVAL

EXPLANATION:

The large number of variances needed for the project make evident that the proposed drive-through restaurant is not appropriate for the location. In addition, the auto-centric design of the restaurant, vehicle volume, large truck deliveries, and externally lit signage may negatively impact the adjacent traditional residential neighborhood on Vernon Ave. The City's Comprehensive Plan adopted in 1997 recommends: "Maintain the Integrity of the Single Family Neighborhoods ... such as the area north of West Main Street ... [is] attractive and stable ... Continue strict code enforcement and disapproval of inappropriate use variances to maintain the positive character of these neighborhoods" (p. III-8).

Felix A. Ottaviano — May 14, 2015

Director — Date

If the County Planning Board disapproved the proposal, or recommends modifications, the referring agency shall NOT act contrary to the recommendations except by a vote of a majority plus one of all the members and after the adoption of a resolution setting forth the reasons for such contrary action. Within 30 days after the final action the referring agency shall file a report of final action with the County Planning Board. An action taken form is provided for this purpose and may be obtained from the Genesee County Planning Department.

SEND OR DELIVER TO:
GENESEE COUNTY DEPARTMENT OF PLANNING
3837 West Main Street Road
Batavia, NY 14020-9404
Phone: (585) 344-2580 Ext. 5467

DEPARTMENT USE ONLY:
GCDP Referral # C-18-BAT-5-15

RECEIVED
Genesee County
Dept. of Planning
5/6/2015

* GENESEE COUNTY * PLANNING BOARD REFERRAL

Required According to:
GENERAL MUNICIPAL LAW ARTICLE 12B, SECTION 239 L, M, N
(Please answer ALL questions as fully as possible)

1. REFERRING BOARD(S) INFORMATION

Board(s) Planning and Development Committee
Address One Batavia City Centre
City, State, Zip Batavia, NY 14020
Phone (585) 345 - 6347 Ext.

2. APPLICANT INFORMATION

Name Ronald Viele (developer)
Address 61 Swan St., #3
City, State, Zip Batavia, NY 14020
Phone (716) 474 - 0237 Ext. Email

MUNICIPALITY: ■ City ☐ Town ☐ Village of Batavia

3. TYPE OF REFERRAL: (Check all applicable items)

- ■ Area Variance
- ☐ Use Variance
- ■ Special Use Permit
- ■ Site Plan Review
- ☐ Zoning Map Change
- ☐ Zoning Text Amendments
- ☐ Comprehensive Plan/Update
- ■ Other: Special Sign Permits

Subdivision Proposal
- ☐ Preliminary
- ☐ Final

4. LOCATION OF THE REAL PROPERTY PERTAINING TO THIS REFERRAL:

A. Full Address 316, 318 and 320 West Main St.
B. Nearest intersecting road Vernon Ave.
C. Tax Map Parcel Number 84.006-3-36, 84.006-3-44 and 84.006-3-43
D. Total area of the property .568 acres Area of property to be disturbed .568 acres
E. Present zoning district(s) C-2

5. REFERRAL CASE INFORMATION:

A. Has this referral been previously reviewed by the Genesee County Planning Board?

■ NO ☐ YES If yes, give date and action taken

B. Special Use Permit and/or Variances refer to the following section(s) of the present zoning ordinance and/or law

BMC 190-37 Special Use Permit, See attached for area variance code sections.

C. Please describe the nature of this request Approval to clear three residential use parcels located in the General Commercial District, merge the parcels and construct a 2,100 square foot Arby's drive-in restaurant.

6. ENCLOSURES – Please enclose copy(s) of all appropriate items in regard to this referral

- ■ Local application
- ■ Site plan
- ☐ Subdivision plot plans
- ■ SEQR forms
- ☐ Zoning text/map amendments
- ☐ Location map or tax maps
- ■ Elevation drawings
- ☐ Agricultural data statement
- ☐ New or updated comprehensive plan
- ■ Photos
- ■ Other: Cover letters, traffic study,

If possible, please provide a reduced version or digital copy of any supporting documentation larger than 11 x 17. Email to planning@co.genesee.ny.us

7. CONTACT INFORMATION of the person representing the community in filling out this form (required information)

Name Douglas Randall Title Code Enf. Officer Phone (585) 345 - 6327 Ext.
Address, City, State, Zip One Batavia City Centre, Batavia, NY 14020 Email drandall@batavianewyork.com

City of Batavia
Department of Public Works
Bureau of Inspections
One Batavia City Center, Batavia, New York 14020 (585)-345-6345 (585)-345-1385 (fax)

To: Genesee County Planning
Planning and Development Committee
Zoning Board of Appeals

From: Doug Randall, Code Enforcement Officer

Date: 5/4/15

Re: 316, 318 and 320 West Main St. **(proposed Arby's)**
Tax Parcel No. 84.006-3-36, 84.006-3-44, 84.006-3-43 (respectively)

Zoning Use District: C-2

The applicant, Ronald Viele (developer), has proposed to purchase these three residential parcels located within a commercial use district, clear the parcels of all structures, merge the properties into one parcel, develop the site and construct a 2,100 square foot Arby's drive-in restaurant.

> BMC 190-37 E(13) Drive-in restaurants for the purposes of Special Use Permits are defined as eating establishments for customers normally arriving by motor vehicles, who are provided quick service, food and drink, and such customers obtain their own food and drink at a counter or other place for dispensing food therein and consuming such food and drink upon the premises; or in such type restaurants where customers may be waited upon without leaving their vehicles by employees of the drive-in restaurant.

Review and Approval Procedures:

County Planning Board- Pursuant to General Municipal Law 239 m, referral to the County Planning Board is required since the property is within 500 feet of **the right of way of a state parkway, throughway, expressway, road or highway.**

City Planning and Development Committee- Pursuant to:

BMC 190-44 B (1)	The PDC shall review and approve or deny site plans in compliance with BMC 190-44 D (3)(a-f).
BMC 190-37	The PDC shall review and authorize or deny Special Use Permits in compliance with BMC 190-37 E (1-14) and 190-37 K (1-14) for drive-in restaurants.
BMC 190-43 R	The PDC shall review and approve or deny Special Sign Permits. There are 3 Special sign permit applications and 2 applications for permitted signs.
BMC 190-49 C	The PDC shall review applications for area variances that include parking and shall make recommendation to the ZBA.

Zoning Board of Appeals- Pursuant to BMC Sec. 190-49 of the zoning ordinance, the ZBA shall review and act on required variances.

Required variances- Area

1) BMC 190-39 B(1)(c)(3) A 10' landscaped buffer is required between commercial and residential use properties.

	Required	Proposed	Difference
Required buffer	10'	2'	8'

2) BMC 190-39 B(1)(b) Front yard parking in the C-2 use district shall be set back from the front lot line by a landscaped buffer at least 10' in width.

	Required	Proposed	Difference
Required buffer	10'	3.7'	6.3'

3) BMC 190-29 A. and Schedule I Yard, area and height restrictions.

	Required	Proposed	Difference
Height (max)	18'	19'	1'

4) BMC 190-37 E(3) Driveways of drive-in restaurants shall not be less than 20' in width at any point. The proposed driveways are restricted to less than the minimum width in four locations.

Minimum driveway width:	Required	Proposed	Difference
West side of bldg.	20'	18'	2'
South side of bldg.	20'	15'	5' (between drive-through and landscape peninsula)
East side of bldg.	20'	14'	6' (between drive-through and east prop. line)
North side of bldg.	20'	15'	5' (between drive-through and 8' wide parking spaces parallel to the north property line)

5) BMC 190-37 E(3) Driveways of drive-in restaurants shall not be more than 24' in width at any point. The proposed driveways exceed the maximum width in three locations.

Maximum driveway width:	Required	Proposed	Difference
Southeast entrance	24'	25'	1'
Northwest entrance	24'	25'	1'
Northeast parking area	24'	36'	12'

6) BMC 190-37 E(3) Driveways are required to be no less than 20' from any side lot line. The proposed driveway is 2' from the east and north side lot lines.

Distance to lot line:	Required	Proposed	Difference
East side lot line	20'	2'	18'
North side lot line	20'	2'	18'

7) BMC 190-37 E(10) No public garage shall be located within 500' of any public entrance to a place of public assembly. The entrance to this proposed restaurant is approximately 45' from the parcels property line that boarders a public garage use.

	Required	Proposed	Difference
Distance to garage parcel	500'	45'	455'

8) BMC 190-37 E(8) Parking for drive-in restaurants shall be provided in the ratio of 4 spaces for each 100 square feet of floor area of the principal building. The building is proposed to be 2,100 square feet.

	Required	Proposed	Difference
Required parking spaces	84	24	60

The granting of area variances for non-residential uses is an unlisted action subject to review. The ZBA will be lead agency to conduct SEQR.

T·Y·LIN INTERNATIONAL
engineers | planners | scientists

April 30, 2015

City of Batavia
City Hall
One Batavia City Centre
Batavia, New York 14020

ATTN: Planning Board Members

RE: Request for Site Plan, Special Use Permit and Sign permit Approval
Arby's Restaurant
316-320 West Main Street

Dear Board Members:

On behalf of Viele Construction Company, we are submitting the following information for Site Plan, Special Use permit and Sign permit review and approval:

- Check in the amount of $100 for Special Use Permit
- (12) Copies of the Letter of Intent
- (12) Copies of the Building Permit Application
- (12) Copies of the Special Use Permit Application
- (12) Copies of the Sign Permit Applications
- (12) Copies of the Short Form EAF
- (12) Copies of the Traffic Summary Memo
- (12) Copies of the Sign Details
- (12) Copies of the Building Rendering
- (12) 11x17 copies of the Building Floor Plan and Elevations
- (12) 11x17 copies of the Schematic Site Plan Drawings

We respectfully request to be placed on the agenda for the May 19th Planning and Development Committee meeting for Site Plan, Special Use Permit and Sign Permit approval.

The project site is located on the north side of West Main Street (NYS Route 5) at the intersection with Vernon Avenue. The proposed project site consists of three separate individual residential properties. It is proposed to construct an approx. 2,100 sq. ft. restaurant building and associated site features including dumpster enclosure, drive-thru\access lanes, asphalt parking, utilities, landscaping, lighting and signage.

Zoning

The project site is approx. 0.568 acres. The parcels are zoned C-2, General Commercial District, in addition to the adjacent residential use parcel to the rear with frontage on Vernon Avenue. The project will require approval of a Special Use permit being a drive-thru restaurant in addition to area variances being required to develop the property, which are as follows:

- Minimum front parking setback\buffer: 10 ft. required where x ft. is proposed
- Minimum rear parking setback\buffer between commercial and residential properties: 10 ft. required where x ft. is proposed
- Minimum distance of driveway from side lot line: 20 ft. required where x ft. is proposed
- Minimum driveway width: 20 ft. required where 15 ft. is proposed
- Minimum number of parking spaces: 84 required (4 spaces/100 sq. ft. of floor area) where 24 are proposed
- Minimum distance from drive-thru restaurant (place of public assembly) to garage: 500 ft. required, xx ft. proposed (Chrysler\Dodge\Jeep dealership)
- Building height: 18 ft. maximum allowed where 19.33 ft. is proposed

Building Architecture & Signage

The proposed building façade will consist of the following materials:

- Brick veneer on all four facades (white)
- IPE wood rain screen on the south, east and west facades
- Hardie Plank siding on the east and west facades (Iron gray)
- EIFS on all four facades (China white)
- Metal Canopy over the windows and doors (red)
- Metal Coping along the roof line (Regal white)
- Aluminum storefront on south, east and west

The proposed site, drive-thru and building signs will consist of the following:

- (1) Sign S1: "Arby's" pole sign (45.5 sq. ft., 25 ft. height) – located at the northeast corner
- (2) Sign S2: Directional enter signs (3.1 sq. ft. each, 4 ft. height) – one at each access drive
- (2) Sign S3: Directional exit signs (3.1 sq. ft. each, 4 ft. height) – one at each access drive
- (1) Sign S4: Order Here Canopy – located on the south side of the building
- (1) Sign S5: Menu board sign (45.0 sq. ft.) - located on the south side of the building
- (1) Sign S6: "Arby's" wall logo sign (17.67 sq. ft.) - located on the south facade
- (2) Sign S7: "Arby's" canopy signs (6.88 sq. ft. each) - located on south and east facades

Site \ Pedestrian Access

The site is proposed to have two two-way access drives, one from West Main Street and one from Vernon Avenue. A new ADA compliant walk is proposed to connect the restaurant to the public walk along West Main Street. T.Y. Lin International (TYLI) will obtain any necessary approvals and permits from the NYSDOT for any proposed work within the state ROW.

Storm Drainage

Currently, storm water runoff from the proposed project site sheet flows to West Main Street and Vernon Avenue. With the proposed development, all storm water runoff from the impervious areas will be collected via on-site catch basins and discharged to the storm sewer system along Vernon Avenue via a closed storm sewer system. The proposed disturbed area is less than (1) acre, therefore a Storm Water Pollution Prevention Plan is not required. The necessary sediment and erosion control measures will be utilized during construction. The proposed redevelopment represents an increase in impervious area of approx. 0.2 acres.

Water / Sanitary Sewer

There is an existing 12-inch water main along the property frontage on the north side of West Main Street. A new domestic water service will be constructed to service the new building. Domestic meter and backflow prevention devices per the requirements of the Bureau of Water and Wastewater will be provided inside the building. TYLI will obtain the necessary approvals from the City Bureau of Water and Wastewater and Genesee County Department of Health.

There is an existing 12-inch sanitary sewer located in the center of West Main Street. It is proposed to reuse the existing sanitary lateral for 316 West Main Street as the new service for the building. The condition of the existing lateral will be confirmed prior to construction. A new grease trap will be provided, which will be sized according to NYSDEC Design Standards for Wastewater Treatment Works, 2014. T.Y. Lin will obtain the necessary approvals from the City Bureau of Water and Wastewater.

Landscaping / Lighting

Landscaping is proposed for the new green areas of the site. New site lighting fixtures are proposed for the parking areas. The lighting has been designed by Security Lighting and meets dark sky compliant and Energy Code requirements.

Construction Schedule / Duration

The intent is for construction to commence in the summer of 2015 once all the necessary permits and approvals have been obtained. The time frame to complete the construction will be approximately 75-85 calendar days.

Should you have any questions or require additional information, please do not hesitate to contact us.

Sincerely,
T.Y. Lin International

Randy Bebout
RLB/ams

Enclosures

Cc: Viele Construction Company, Ron Viele (electronic)

T:\rochester\user\temp project folder\Arby's\corresp\4-29-15_Planning & Development Committee Submission\PDC_Letter of Intent_4-29-15

Special Use Permit Standards

Standards applicable for all special use permits. The Planning and Development Committee may issue a special use permit only after it has found that all the following standards and conditions have been satisfied, in addition to any other applicable standards and conditions contained elsewhere in this chapter.

(1) The location and size of such use and intensity of the operations involved in or conducted therewith, its site layout and its relation to access streets shall be such that both pedestrian and vehicular traffic to and from the use and the assembly of persons therewith will not be hazardous and shall be in harmony with the orderly development of the district. *The proposed use is consistent with the zoning and the surrounding commercial properties on West Main Street. The site will provide for a safe and efficient pedestrian and vehicle circulation.*

(2) The location, nature and height of buildings, walls and fences will not discourage the appropriate development and use of adjacent land and buildings, nor impair their value. *The building is appropriate size and height for the project site. The proposed solid fence will provide appropriate buffering to the adjacent residential neighbor to mitigate any potential impacts to the property.*

(3) The operation of any such use shall not be more objectionable to nearby properties than would be operation of any permitted use. *The proposed use should not be objectionable compared to other similar permitted uses.*

(4) The operation of any such use shall not cause undo noise, vibration, odor, lighting glare, and unsightliness so as to detrimentally impact adjacent properties. *The proposed project will not create unreasonable noises, odor, lighting glare or unsightliness upon completion of the project. The order speaker is on the street side of the building and is directed towards West Main Street. Some temporary vibrations may occur during demolition and construction of the site parking lot (compaction of soil via vibratory rollers). Site lighting will be directed towards the building and parking areas. Light spill will be controlled via internal glare and house side shields. The solid fence will prevent any views of the new parking/driveway areas from the adjacent neighbor's property.*

(5) When a commercial or industrial special use abuts a residential property the Planning and Development Committee may find it necessary to require screening of sufficient height and density (i.e. fences, hedges, etc.) to reduce or eliminate the conflicting environmental conditions previously mentioned. *A solid fence will be installed along the entire length of the side and rear lot line of the neighbor's residential property.*

(6) Electrical disturbances shall not be caused so as to disrupt radio or television communications in the immediate area. *There is nothing in the project scope that will disrupt radio or television communications.*

(7) The proposed use shall meet the off-street parking and loading requirements of similar uses. *The applicant is requesting an area variance for the number of off street parking spaces proposed. The code requires (84) while (24) are proposed. The number of spaces proposed is sufficient for Arby's based on similar locations and proposed number of seats, approximately (53).*

(8) Appropriate on-lot drainage shall be provided so as to eliminate any potential on-site water related problems. Also, the drainage systems created shall not detrimentally impact on adjacent properties. *All of the storm water run-off from impervious areas will be contained on-site by proposed curbs around the entire perimeter. There will be new on-site catch basins to capture the water and will be conveyed to the existing storm sewer on Vernon Avenue via a closed storm sewer pipe.*

(9) Traffic access to and from the use site, as well as on-lot traffic circulation, shall be designed so as to reduce traffic hazards. *There are two driveways proposed which provide appropriate ingress and egress to the site. The site is designed to be a one-way circulation, which minimizes any potential traffic hazards on-site.*

(10) Such use shall be attractively landscaped. *New landscaping is proposed in the available green areas of the site.*

(11) A special use permit shall not be issued for use on a lot where there is an existing violation of this chapter unrelated to the use which is the subject of the requested special use permit, as determined by the Planning and Development Committee. *The applicant is not aware of any know issues with the (3) separate properties.*

(12) As a condition of all special use permits, right of entry for inspection with reasonable notice shall be provided to determine compliance with the conditions of said permit. *The owner will comply with the requirements of the Special Use Permit.*

CITY OF BATAVIA **BUILDING PERMIT APPLICATION**

DATE: 4/29/15

APPLICANT NAME & PHONE: Viele Construction Company 716-474-0237

Project Location and Information **Permit #:** _____ **Fee:** _____

Address of Project: 316-320 West Main Street

Owner & Address: 61 Swan Street of Batavia, Inc., 61 Swan St., #3, Batavia, NY 14020

Phone: 716-474-0237

Project Type/Describe Work

Estimated cost of work: $500,000.00 Start date: Summer 2015

Describe project: Construction of a 2,100 sq. ft. Arby's Restaurant Building

Contractor Information – **Insurance certificates (liability & workers comp) required to be on file**

GENERAL

Name/Address: Viele Construction Company, 61 Swan Street, #3, Batavia, NY, 14020

Phone: 716-474-0237

PLUMBING **(City of Batavia Licensed Plumber Required)**

Name/Address: TBD

Phone: _____

HEATING

Name/Address: TBD

Phone: _____

ELECTRICAL **(Third Party Electrical Inspection Required)**

Name/Address: TBD

Phone: _____

FOR OFFICE USE ONLY

Zoning District: _____ Flood Zone: _____ Corner Lot: _____ Historic District/Landmark: _____

Zoning Review: _____ Variance Required: _____ Site Plan Review: _____ Other: _____

National Grid Sign Off (Pools): _____ Lot Size: _____

Existing Use: _____ NYS Building Code Occupancy Class: _____

Proposed Use: _____ NYS Building Code Occupancy Class: _____

REQUIRED INSPECTIONS

Contact the Bureau of Inspection at (585) 345-6345 twenty-four (24) hours in advance to schedule all inspections.

IT IS THE RESPCONSIBILITY OF THE OWNER AND/OR AGENT TO CONTACT THIS OFFICE & BE PRESENT FOR ALL INSPECTIONS

____ Site ____ Water Service ____ Sewer Service

____ Footing before Placing Concrete

____ Foundation before backfill

____ Framing before enclosing (After mechanical inspection)

____ Electrical before enclosing (Third Party Electrical Inspection Agency)

____ Plumbing before enclosing (City of Batavia Licensed Plumber Required)

____ Insulation before enclosing ____ Ice/Water Shield ____ Final Completion

In consideration of the granting of the permit hereby petitioned for, the undersigned hereby agrees to: 1) comply with the terms thereof, the laws of the State of New York, the Ordinance of the City of Batavia, and the Regulations of the various departments of the County of Genesee and the State of New York; 2) preserve the established building line; 3) request all the necessary inspections and authorize and provide the means of entry to the premises and building to the Bureau of Inspection, and 4) will not use or permit to be used the structure or structures covered by the permit until sanitary facilities are completely furnished and either a Certificate of Occupancy or Certificate of Completion is issued. The undersigned hereby certifies that all of the information in this petition is correct and true.

_____ 4/29/15

Applicant Signature Date

Roofing Disclaimer - Per the Residential & Building Code of New York State

R907.3 Recovering versus Replacement

New roof coverings shall not be installed without first removing existing roof coverings where any of the following conditions occur:

1. Where the existing roof or roof coverings is water-soaked or has deteriorated to the point that the existing roof or roof covering is not adequate as a base for additional roofing.
2. Where the existing roof covering is wood shake, slate, clay, cement or asbestos-cement tile.
3. Where the existing roof has two or more applications of any type of roof covering.

Exceptions:

1. Complete and separate roofing systems, such as standing-seam metal roof systems, that are designed to transmit the roof loads directly to the building's structural system and that do not rely on existing roofs and roof coverings for support shall not require the removal of existing roof coverings.
2. Metal panel, metal shingle, and concrete and clay tile roof coverings shall be permitted to be installed over existing wood shake roofs when applied in accordance with Section R907.4.

I, _____owner and/or agency of the property located at _____ for Building Permit No. _____ have reviewed and understand the requirements of Section 907.3 Recovering versus Replacement.

_____ _____

Applicant Signature Date

Fence Disclaimer

I understand Section 190-33.B Fences, Walls and Hedges of the City of Batavia Zoning Ordinance regulated the installation of fences as follows:

"Fences, hedges and walls in Residential Districts shall not exceed three (3) feet above ground level when located within fifteen (15) feet of the property line abutting any street and shall not exceed six (6) feet above ground level when located elsewhere on the property. However, there shall be no height limit for hedges in rear yards within residential zones. In commercial and Industrial Districts, fences, hedges, and walls shall not exceed eight (8) feet in height unless permitted by a special use permit from the Planning & Development Committee. A fence designed to be structurally supported by posts, cross members or rails on one (1) side only shall be erected with the posts, cross members or rails on the fence owner's side, and the finished side of the fence shall face adjacent properties."

I,_____owner and/or agent of the property located at _____for Permit No._____ understand that this permit is issued based on information supplied by owner/agent and that the City of Batavia accepts no responsibility for inaccurate documentation or information supplied to secure the permit.

_____ _____

Applicant Signature Date

PERMIT NO._____

SPECIAL USE PERMIT

CITY OF BATAVIA, NEW YORK

LOCATION: 316-320 West Main St.
OWNER: 61 Swan St. of Batavia Inc.
Address: 61 Swan St, #3, Batavia, NY 14202

Application Date: 4/29/15
Tax Parcel No.: 84.006-3-36/43/44
Phone No. 716-474-0237

YES COUNTY PLANNING REVIEW	YES ZONING VARIANCE REQUIRED
C-2 ZONING DISTRICT	No HISTORIC DISTRICT
NO FLOOD ZONE	No HISTORIC LANDMARK
YES CORNER LOT	No CITY ENGINEER REVIEW
YES SITE PLAN REVIEW	No CITY COUNCIL REVIEW
NO BID	_____ OTHER

PROJECT DESCRIPTION:
Construction of a 2,100 sq. ft. Arby's restaurant building and associated site improvements

EXISTING USE: Residential
PROPOSED USE: Restaurant (new bldg.)

N.Y.S. BLDG. CODE OCC. CLASS: A-2
N.Y.S. BLDG. CODE OCC. CLASS: A-2

LOT SIZE: 160' x 201' +/-
LOT AREA: 0.568 AC.

CITY PLANNING & DEVELOPMENT REVIEW:

____APPROVAL AS PRESENTED ____DISAPPROVAL____APPROVAL WITH CONDITIONS

CHAIRMAN SIGNATURE:_____ **DATE:**_____

[signature]	4/29/15	_____
Applicant Signature	Date	Issuing Officer

Permit Fee:_____ Issue Date:_____

Arby's
Arby's

SIGN PERMIT APPLICATION

Permit No.: _____
Date: _____
Zone: _____
Special Sign: Yes

CITY OF BATAVIA
10 West Main Street, Batavia, NY, 14020
Phone: (716) 343-8180 • Fax (716) 343-9221

APPLICANT: Viele Construction Company RonaldViele@ymail.com
Name — E-mail Address
61 Swan Street, #3 (716) 474-0237
Street Address — Phone — Fax
Batavia, NY 14020
City, State, Zip Code

OWNER: 61 Swan Street of Batavia, Inc. RonaldViele@ymail.com
Name — E-mail Address
61 Swan St. #3 716-474-0237
Street Address — Phone — Fax
Batavia, NY 14202
City, State, Zip Code

ADDRESS OF SIGN: 316-320 West Main Street

SIGN AREA: Length ~~5'-1"~~ Width ~~1'-9 3/8"~~ Area 6.88 SIGN ST ~~(x2)~~

TYPE OF SIGN: South Elev.

1. **All sign applications must have an illustration of the sign with its dimensions and copy.**
2. **Freestanding signs must have a Site Plan to show the sign's location on the property**
3. **All other signs must include an elevation plan to show the sign's placement on the building**

☐ Freestanding:	Set Back____	Height____		
☐ Wall	Wall Length____	Wall Height____	Area____	
☐ Projecting				
☐ Marquee				
☒ Awning/Canopy	Length 37'-4 9/16"	Height 2'-0"	Area 74.8 SQ. FT. (FRONT ELEV	
☐ Window	Window Length____	Window Height____	Area____	
☐ Portable	~~L 57'-2 3/4"~~	~~H 2'-0"~~	~~A 114.4 SQ. FT. (SIDE ELEV)~~	

LIGHTING: ☒ Internal ☐ External

18.7 sq.' Permitted
6.88 Proposed.
OK

EXISTING SIGNS (Please list all existing signs with dimensions):

Applicant's Signature: Ronald Viele Date: 4/29/15

Issuing Officer: _____ Date: _____

Planning Board Chairperson: _____ Date: _____

FEES: ___ $25 Sign Permit ✓ $50 Special Sign Permit ___ $10 Portable Sign

(Second Canopy Sign)
One Permitted.

(6.88 sq. ft.) S7

Face Illuminated Letters

16¼" x 5'-1" Letterset December, 2013

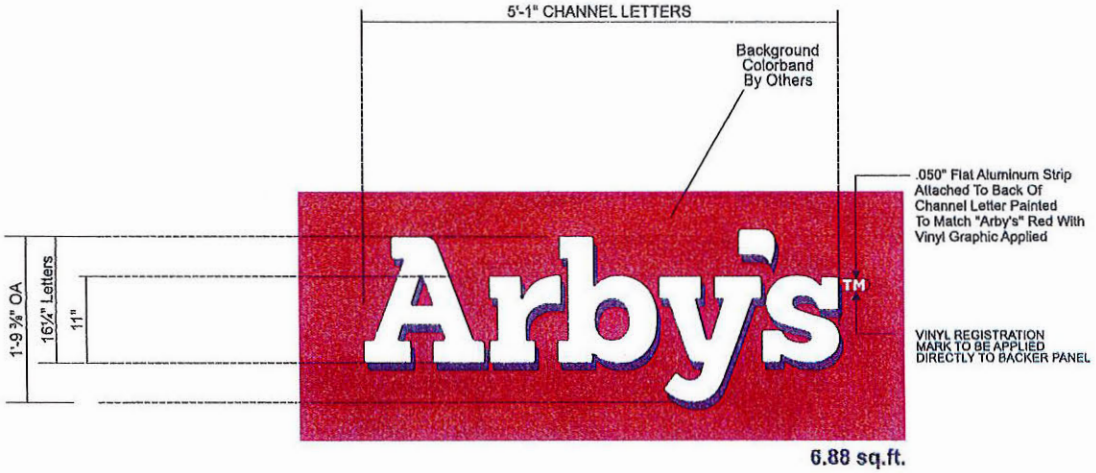

FACELIT LETTERSET
SCALE: 3/4"= 1'-0"

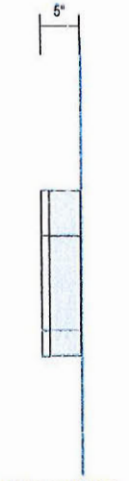

SIDE VIEW
SCALE: 3/4"= 1'-0"

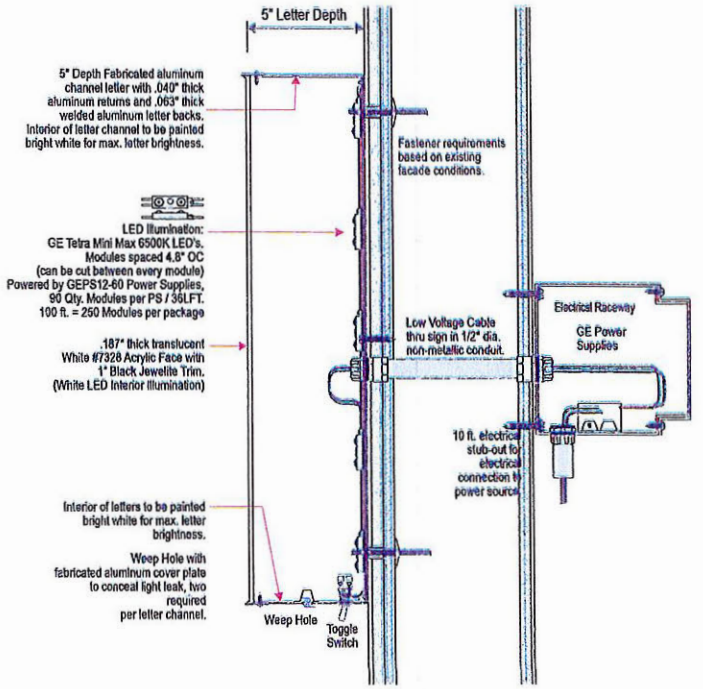

Letter Construction Detail - Scale 3/16" = 1"

GENERAL SPECIFICATIONS:

LETTERSET
- LETTERSET TO BE FABRICATED .040" RETURNS WITH .063" BACKS.
- FACES TO BE 3/16" THICK, #7328 WHITE ACRYLIC WITH 1" BLACK JEWELITE TRIM.
- RETURNS TO BE DETERMINED.
- ILLUMINATION PROVIDED BY GE WHITE LED (GEWHMMS8).
- LETTERSET TO MOUNT TO EXISTING FACADE WITH APPLICABLE FASTENERS.

Allen Industries FILE NUMBER: E18202 | c UL us LISTED ELECTRIC SIGN | THIS SIGN IS INTENDED TO BE INSTALLED IN ACCORDANCE WITH THE REQUIREMENTS OF ARTICLE 600 OF THE NATIONAL ELECTRICAL CODE AND/OR OTHER APPLICABLE LOCAL CODES. THIS INCLUDES PROPER GROUNDING AND BONDING OF THE SIGN. | GROUNDED ELECTRICAL CONNECTIONS

Arby's

Client Review Status	Notes	Date / Description	Project Information
Allen Industries, Inc. requires that an "☐ Approved" drawing be obtained from the client prior to any production release or production release revision.		12/16/13 Issue Date	Client Arby's
☐ Approved ☐ Approved as Noted ☐ Revise & Resubmit		12/20/13 ⚠1 Pylon Added	11212 S. Memorial Pkwy
Name		12/23/13 ⚠2 File Split / Revisions	Huntsville, AL 35803
Title Date		12/30/13 ⚠3 Revision	File Huntsville AL_ARBYS-C 220 Proposed
		⚠4	Sales EW Design WA PM DL

This is an original unpublished drawing, created by Allen Industries, Inc. It is submitted for your personal use in connection with the project being planned for you by Allen Industries, Inc. It is not to be shown to anyone outside your organization, nor used, reproduced, copied or exhibited in any fashion whatsoever. All or part of this design (except for registered trademarks) remain the property of Allen Industries, Inc.

Allen Industries
Corporate Identity Programs
Architectural Signage Division
4100 Sheraton Court, Greensboro, NC 27410
Phone 888-294-2007 Fax 336-294-4333
Because Image Is Everything®

SIGN PERMIT APPLICATION

Permit No.: _____
Date: _____
Zone: _____
Special Sign: Yes

CITY OF BATAVIA
10 West Main Street, Batavia, NY, 14020
Phone: (716) 343-8180 • Fax (716) 343-9221

APPLICANT: Viele Construction Company — Ronaldviele@ymail.com
Name — E-mail Address
61 Swan Street, #3 — (716) 474-0237
Street Address — Phone — Fax
Batavia, NY 14020
City, State, Zip Code

OWNER: 61 Swan Street of Batavia, Inc. — Ronaldviele@ymail.com
Name — E-mail Address
61 Swan St. #3 — 716-474-0237
Street Address — Phone — Fax
Batavia, NY 14202
City, State, Zip Code

ADDRESS OF SIGN: 316-320 West Main Street

SIGN AREA: Length 9'-4" Width 5'-6" Area 45 sq. ft. SIGN 55

TYPE OF SIGN: Menu Board.

1. **All sign applications must have an illustration of the sign with its dimensions and copy.**
2. **Freestanding signs must have a Site Plan to show the sign's location on the property**
3. **All other signs must include an elevation plan to show the sign's placement on the building**

[X] Freestanding:	Set Back NA	Height 8'-0"		
[ ] Wall	Wall Length ____	Wall Height ____	Area ____	
[ ] Projecting				
[ ] Marquee				
[ ] Awning/Canopy	Length ____	Height ____	Area ____	
[ ] Window	Window Length ____	Window Height ____	Area ____	
[ ] Portable				

LIGHTING: [X] Internal [ ] External

40 sq' Permitted
45 sq' Proposed.
5 over
special sign-put.

EXISTING SIGNS (Please list all existing signs with dimensions):

Applicant's Signature: Ronald Viele — Date: 4/29/15

Issuing Officer: _____ Date: _____

Planning Board Chairperson: _____ Date: _____

FEES: ___ $25 Sign Permit ✓ $50 Special Sign Permit ___ $10 Portable Sign

Sign to large

S5
(45 Sq. Ft.)

55"
16"
NEW FROM THE
SMOKE HOUSE
BACK IN SEASON
DESSERTS
GYROS
KIDS MENU
SALADS
ROAST BEEF
MORE BEEF
STEAK
CHICKEN
GREAT A MEAL
VALUE MENU
50"
21"
70"

SIGN PERMIT APPLICATION

Permit No.: _____
Date: _____
Zone: _____
Special Sign: Yes

CITY OF BATAVIA
10 West Main Street, Batavia, NY, 14020
Phone: (716) 343-8180 • Fax (716) 343-9221

APPLICANT: Viele Construction Company — RonaldViele@ymail.com
Name — E-mail Address
61 Swan Street, #3 — (716) 474-0237
Street Address — Phone — Fax
Batavia, NY 14020
City, State, Zip Code

OWNER: 61 Swan Street of Batavia, Inc. — RonaldViele@ymail.com
Name — E-mail Address
61 Swan St. #3 — 716-474-0237
Street Address — Phone — Fax
Batavia, NY 14202
City, State, Zip Code

ADDRESS OF SIGN: 316-320 West Main Street

SIGN AREA: Length 7'-1" Width 6'-5 1/8" Area 45.5 SQ.FT SIGN S1

TYPE OF SIGN:

1. **All sign applications must have an illustration of the sign with its dimensions and copy.**
2. **Freestanding signs must have a Site Plan to show the sign's location on the property**
3. **All other signs must include an elevation plan to show the sign's placement on the building**

40 sq' Permitted
45.5 Proposed
5.5 over
Special Sign

[X] Freestanding:	Set Back 5'-0"	Height 25'-0"		
[ ] Wall	Wall Length ____	Wall Height ____	Area ____	
[ ] Projecting				
[ ] Marquee				
[ ] Awning/Canopy	Length ____	Height ____	Area ____	
[ ] Window	Window Length ____	Window Height ____	Area ____	
[ ] Portable				

LIGHTING: [X] Internal [ ] External

EXISTING SIGNS (Please list all existing signs with dimensions):

Applicant's Signature: Ronald Viele — Date: 4/29/15

Issuing Officer: _____ — Date: _____

Planning Board Chairperson: _____ — Date: _____

FEES: ___ $25 Sign Permit ✓ $50 Special Sign Permit ___ $10 Portable Sign

Sign to large

S1
(45.5 SQ. FT.)

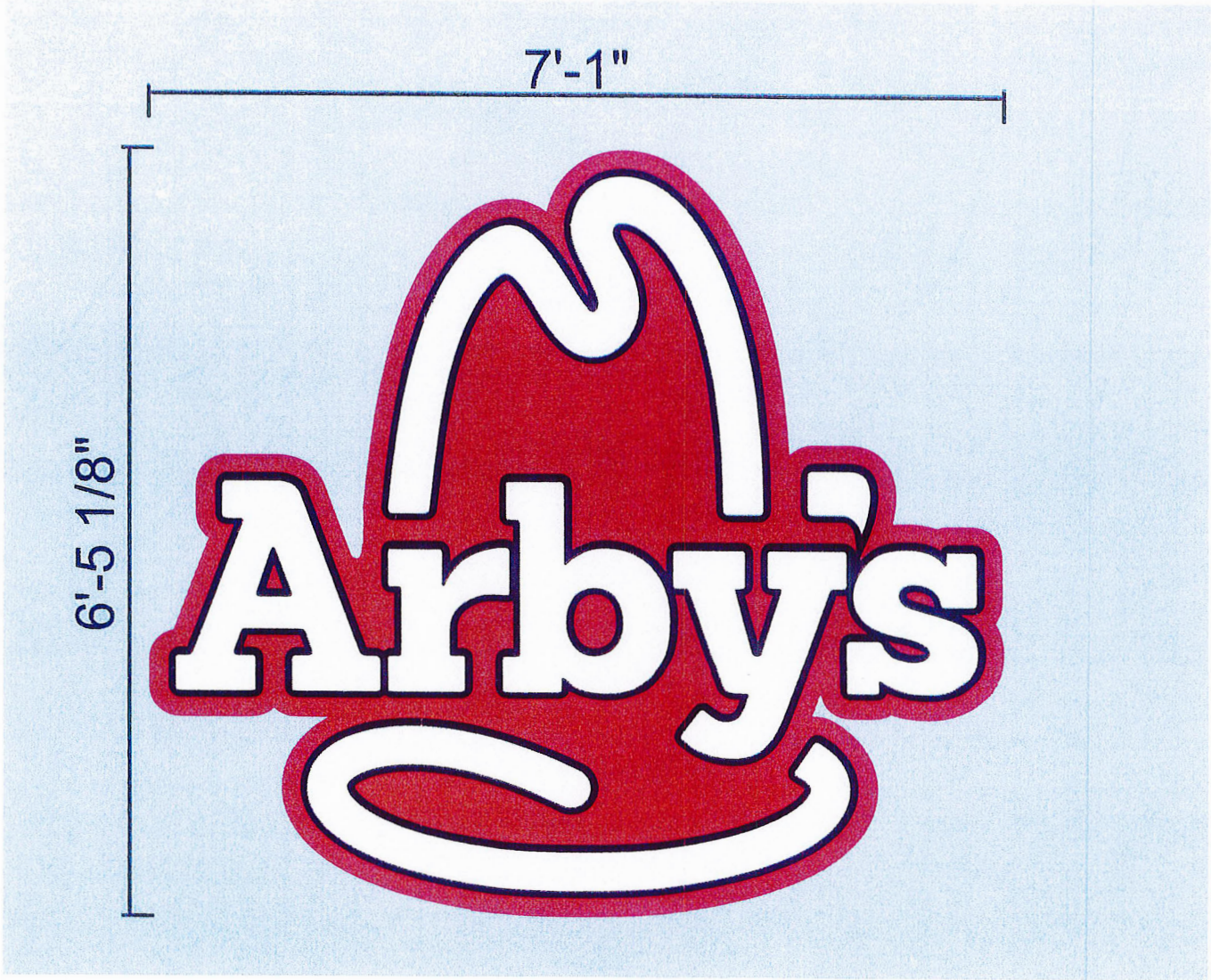

SIGN PERMIT APPLICATION

Permit No.: _____
Date: _____
Zone: _____
Special Sign: N/O

CITY OF BATAVIA
10 West Main Street, Batavia, NY, 14020
Phone: (716) 343-8180 • Fax (716) 343-9221

APPLICANT: Viele Construction Company — RonaldViele@ymail.com
Name — E-mail Address
61 Swan Street, #3 — (716) 474-0237
Street Address — Phone — Fax
Batavia, NY 14020
City, State, Zip Code

OWNER: 61 Swan Street of Batavia, Inc. — RonaldViele@ymail.com
Name — E-mail Address
61 Swan St. #3 — 716-474-0237
Street Address — Phone — Fax
Batavia, NY 14202
City, State, Zip Code

ADDRESS OF SIGN: 316-320 West Main Street

SIGN AREA: Length 48" Width 53" Area 17.67 sq. ft. SIGN S6

TYPE OF SIGN:

1. **All sign applications must have an illustration of the sign with its dimensions and copy.**
2. **Freestanding signs must have a Site Plan to show the sign's location on the property**
3. **All other signs must include an elevation plan to show the sign's placement on the building**

☐ Freestanding:	Set Back ____	Height ____		
☒ Wall	Wall Length 29'-10"	Wall Height 17'-6"	Area 522 +/- Sq. Ft.	78.3 sq. ft permitted
☐ Projecting				17.67 proposed
☐ Marquee				
☐ Awning/Canopy	Length ____	Height ____	Area ____	
☐ Window	Window Length ____	Window Height ____	Area ____	
☐ Portable				

OK

LIGHTING: ☒ Internal ☐ External

EXISTING SIGNS (Please list all existing signs with dimensions):

Applicant's Signature: Ronald Viele Date: 4/29/15

Issuing Officer: _____ Date: _____

Planning Board Chairperson: _____ Date: _____

FEES: ✓ $25 Sign Permit ___ $50 Special Sign Permit ___ $10 Portable Sign

S6
(17.67 sq. ft.)

Prototype 48" Wall Logo

December, 2013
Page 4

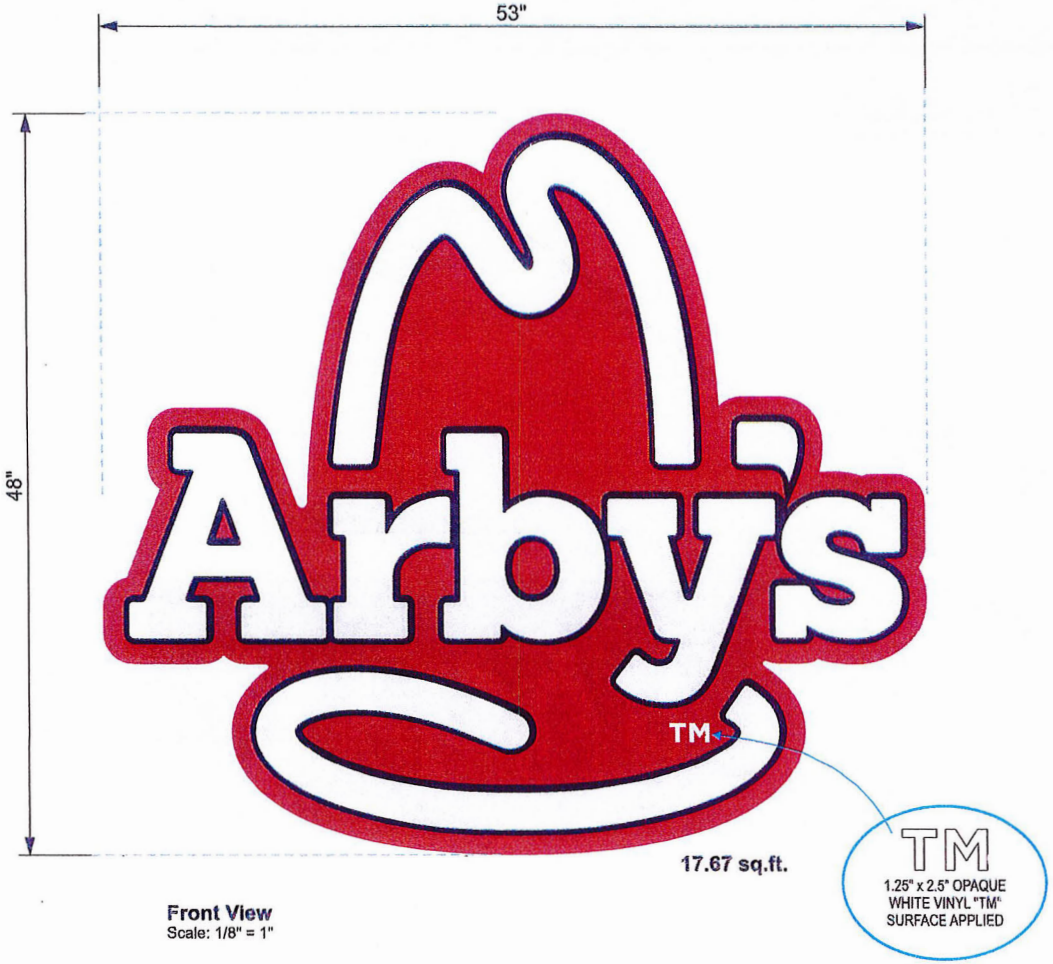

Front View
Scale: 1/8" = 1"

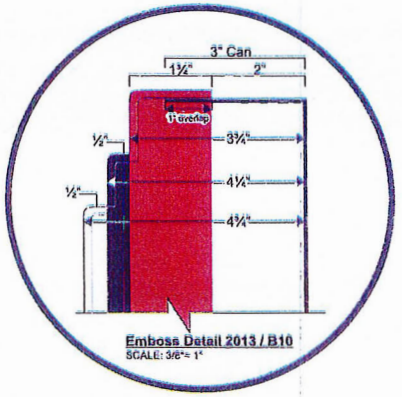

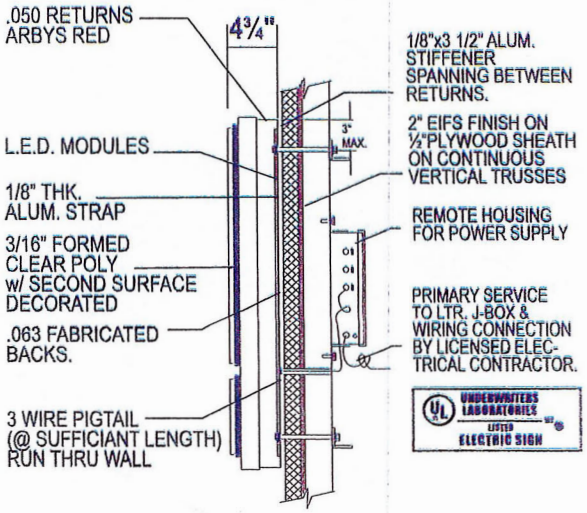

Client Review Status	Notes	Date / Description	Project Information
Allen Industries, Inc. requires that an "☐ Approved" drawing be obtained from the client prior to any production release or production release revision.		12/16/13 Issue Date	Client Arby's
☐ Approved ☐ Approved as Noted ☐ Revise & Resubmit		12/20/13 Δ Pylon Added	11212 S. Memorial Pkwy
Name		12/23/13 Δ File Split / Revisions	Huntsville, AL 35803
Title Date		12/30/13 Δ Revision	File Huntsville AL_ARBYS-C 220 Proposed
			Sales EW Design WA PM DL

This is an original unpublished drawing, created by Allen Industries, Inc. It is submitted for your personal use in connection with the project being planned for you by Allen Industries, Inc. It is not to be shown to anyone outside your organization, nor used, reproduced, copied or exhibited in any fashion whatsoever. All or part of this design (except for registered trademarks) remain the property of Allen Industries, Inc.

Allen Industries
Corporate Identity Programs
Architectural Signage Division
4100 Sheraton Court, Greensboro, NC 27410
Phone 888-294-2007 Fax 336-294-4333
Because Image Is Everything

SIGN PERMIT APPLICATION

Permit No.: _____
Date: _____
Zone: _____
Special Sign: No

CITY OF BATAVIA
10 West Main Street, Batavia, NY, 14020
Phone: (716) 343-8180 • Fax (716) 343-9221

APPLICANT: Viele Construction Company RonaldViele@ymail.com
Name E-mail Address
61 Swan Street, #3 (716) 474-0237
Street Address Phone Fax
Batavia, NY 14020
City, State, Zip Code

OWNER: 61 Swan Street of Batavia, Inc. RonaldViele@ymail.com
Name E-mail Address
61 Swan St. #3 716-474-0237
Street Address Phone Fax
Batavia, NY 14202
City, State, Zip Code

ADDRESS OF SIGN: 316-320 West Main Street

SIGN AREA: Length ~~5'-1"~~ Width 1'-9 3/8" Area 6.88 SIGN S7 ~~(x2)~~

TYPE OF SIGN: West Elev.

1. **All sign applications must have an illustration of the sign with its dimensions and copy.**
2. **Freestanding signs must have a Site Plan to show the sign's location on the property**
3. **All other signs must include an elevation plan to show the sign's placement on the building**

☐ Freestanding:	Set Back_____	Height_____		
☐ Wall	Wall Length_____	Wall Height _____	Area_____	
☐ Projecting				
☐ Marquee				
☒ Awning/Canopy	Length 57'-2 3/4"	Height 2'	Area 114.4 sq. ft.	
☐ Window	Window Length____	Window Height____	Area _____	
☐ Portable				

LIGHTING: ☒ Internal ☐ External

28.6 sq. permitted
6.88 Proposed.
OK

EXISTING SIGNS (Please list all existing signs with dimensions):

Applicant's Signature: Ronald Viele Date: 4/29/15

Issuing Officer: _____ Date: _____

Planning Board Chairperson: _____ Date: _____

FEES: ✓ $25 Sign Permit ___ $50 Special Sign Permit ___ $10 Portable Sign

(6.88 sq. ft.) S7

Face Illuminated Letters

16¼" x 5'-1" Letterset December, 2013

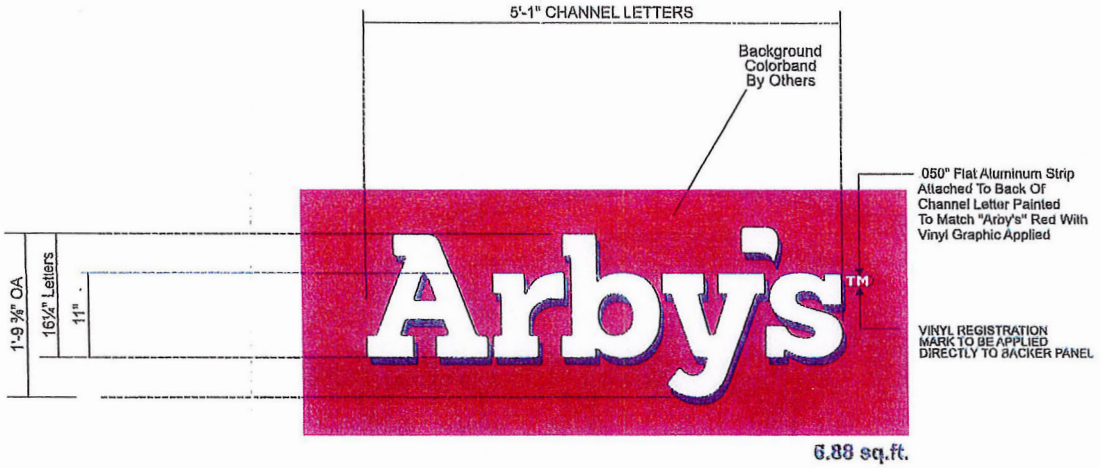

FACELIT LETTERSET
SCALE: 3/4"= 1'-0"

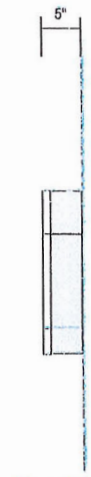

SIDE VIEW
SCALE: 3/4"= 1'-0"

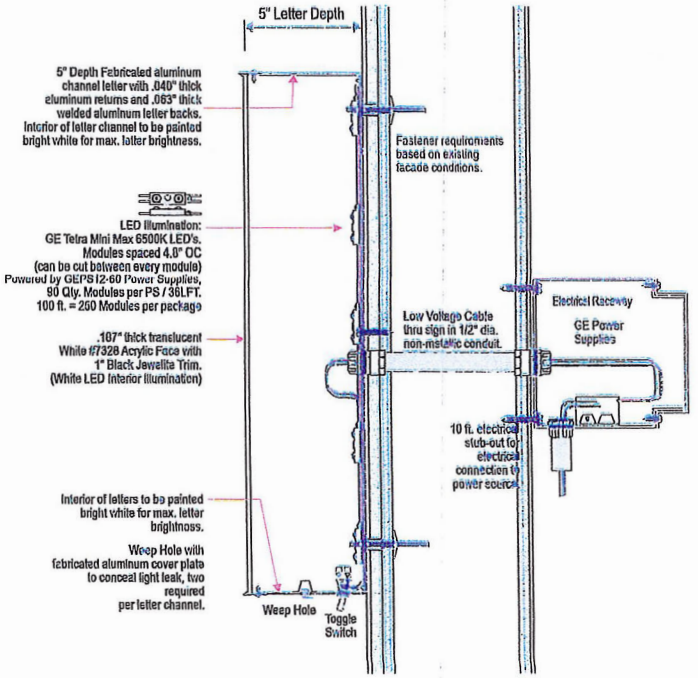

Letter Construction Detail - Scale 3/16" = 1"

GENERAL SPECIFICATIONS:

LETTERSET
- LETTERSET TO BE FABRICATED .040" RETURNS WITH .063" BACKS.
- FACES TO BE 3/16" THICK, #7328 WHITE ACRYLIC WITH 1" BLACK JEWELITE TRIM.
- RETURNS TO BE DETERMINED.
- ILLUMINATION PROVIDED BY GE WHITE LED (GEWHMMS8).
- LETTERSET TO MOUNT TO EXISTING FACADE WITH APPLICABLE FASTENERS.

Allen Industries FILE NUMBER: E16202 | c UL us LISTED ELECTRIC SIGN | THIS SIGN IS INTENDED TO BE INSTALLED IN ACCORDANCE WITH THE REQUIREMENTS OF ARTICLE 600 OF THE NATIONAL ELECTRICAL CODE AND/OR OTHER APPLICABLE LOCAL CODES. THIS INCLUDES PROPER GROUNDING AND BONDING OF THE SIGN. | GROUNDED ELECTRICAL CONNECTIONS

Arby's

Client Review Status	Notes	Date / Description	Project Information
Allen Industries, Inc. requires that an "☐ Approved" drawing be obtained from the client prior to any production release or production release revision.		12/16/13 Issue Date	Client Arby's
☐ Approved ☐ Approved as Noted ☐ Revise & Resubmit		12/20/13 ⚠ Pylon Added	11212 S. Memorial Pkwy
Name		12/23/13 ⚠ File Split / Revisions	Huntsville, AL 35803
Title Date		12/30/13 ⚠ Revision	File Huntsville AL_ARBYS-C 220 Proposed
		⚠	Sales EW Design WA PM DL

This is an original unpublished drawing, created by Allen Industries, Inc. It is submitted for your personal use in connection with the project being planned for you by Allen Industries, Inc. It is not to be shown to anyone outside your organization, nor used, reproduced, copied or exhibited in any fashion whatsoever. All or part of this design (except for registered trademarks) remain the property of Allen Industries, Inc.

Allen Industries
Corporate Identity Programs
Architectural Signage Division
4100 Sheraton Court, Greensboro, NC 27410
Phone 888-294-2007 Fax 336-294-4333
Because Image is Everything®

S2/S3

(3.1 SQ.FT.)

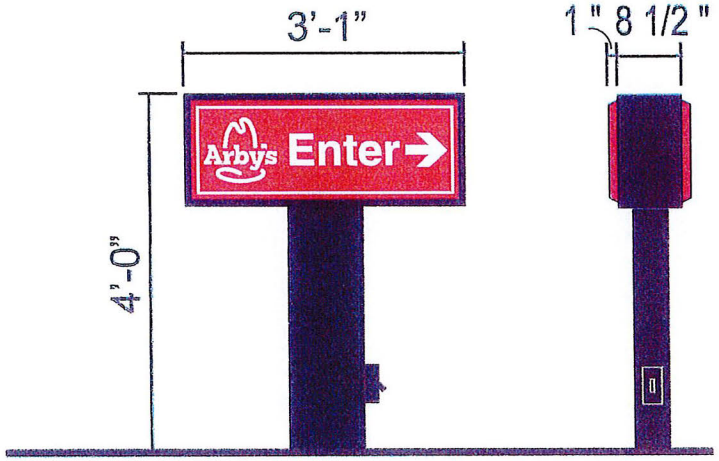

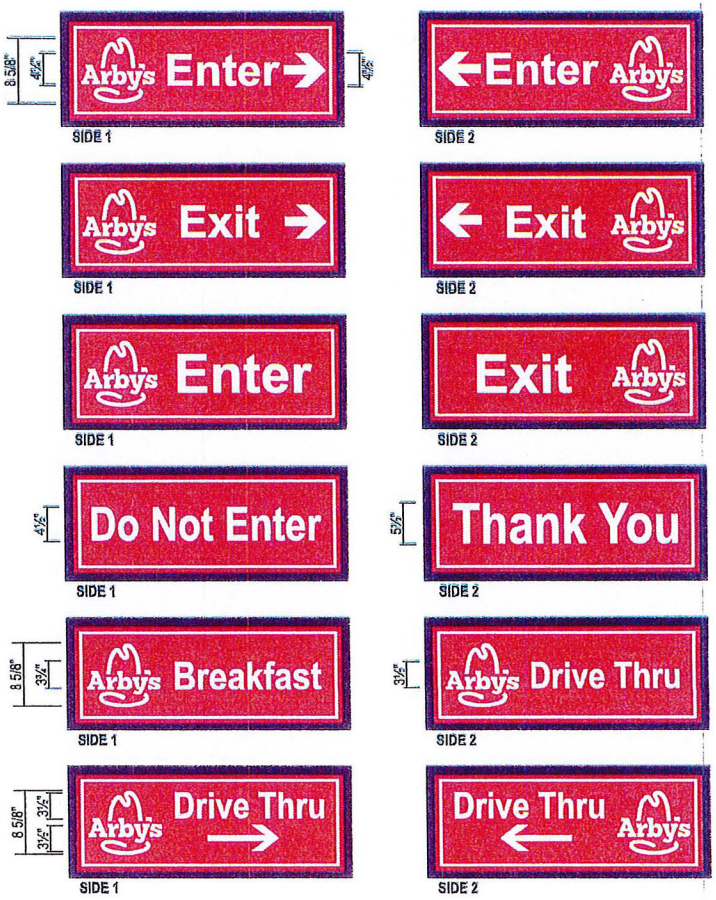

DIRECTIONALS

* Exempt from Sign permits per BMC 190-436(

S4

CANOPY SYSTEM #CP-2100

SCALE: 1-2" = 1'-0"

COLOR PLACEMENT:

1. FABRIC TOP (HERCULITE- CANOPY PLUS 132 CLASSIC RED #812872)
2. 3M HP VINYL " CARDINAL RED"
3. TO MATCH SHERWIN WILLIAMS #1134 "MASTERPIECE TAN"

ALL PAINT: AKZO - NOBEL "GRIP GUARD" ACRYLIC POLYURETHANE

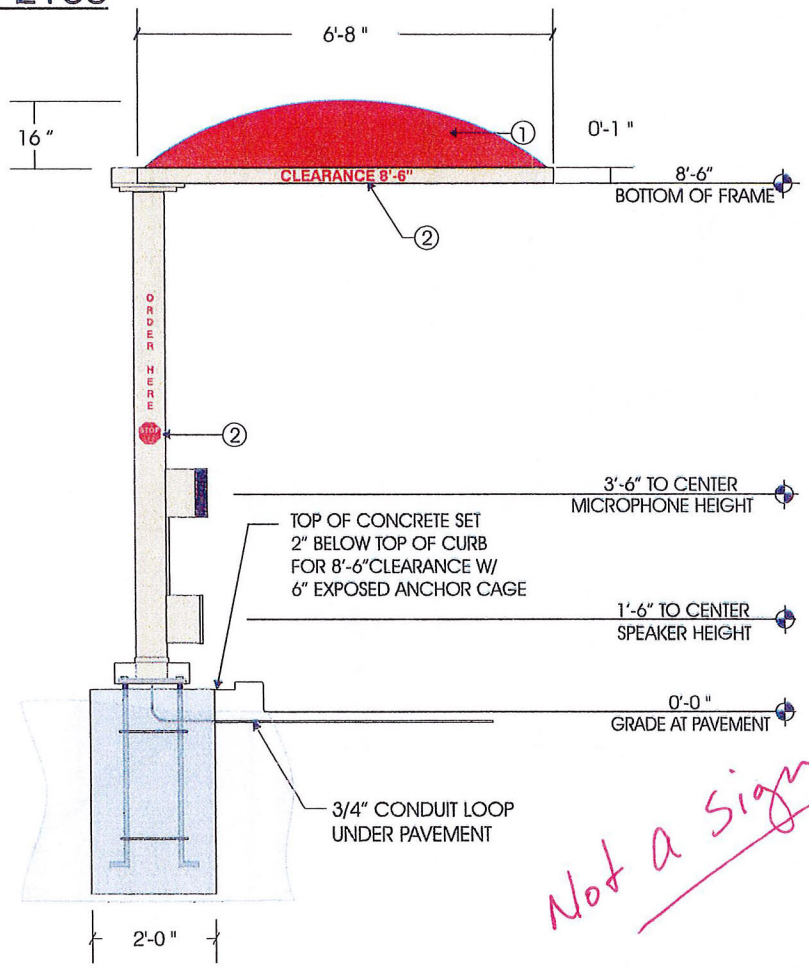

DRIVE UP VIEW

SCALE - ½" = 1'- 0"

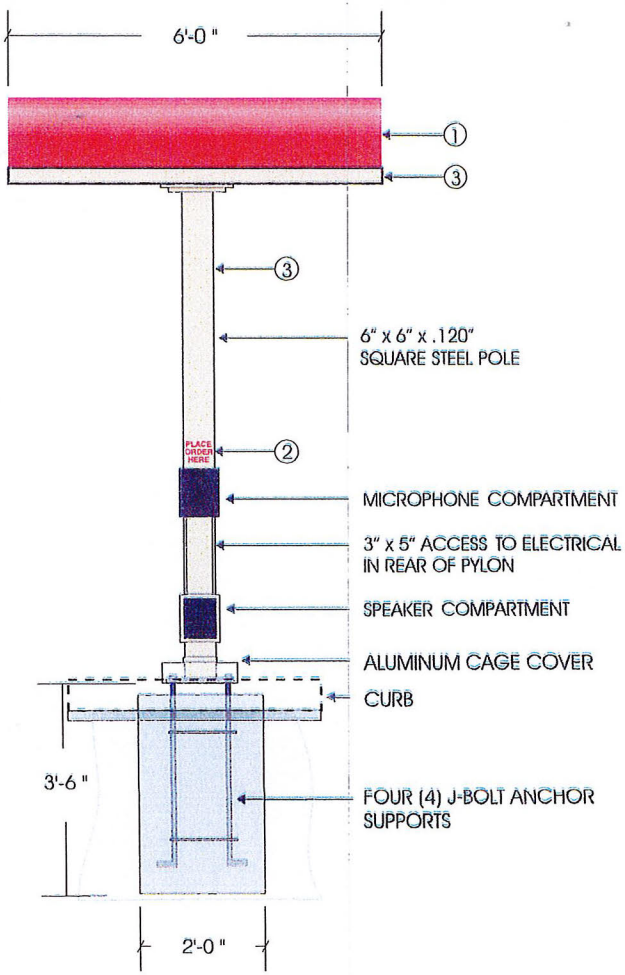

FRONT VIEW

SCALE - ½" = 1'- 0"

Not a Sign

FOOTING DETAIL

(BASED ON ASSUMPTION OF A SOIL BEARING CAPACITY OF 3000 PSI.)

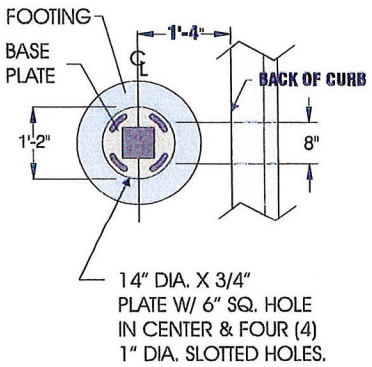

BASE PLATE DETAIL

SCALE: 1-2" = 1'-0"

Uni-Structures, Inc.
8540 Cobb Center Dr., Ste 100 Kennesaw, GA 30152
770-499-2000

CLIENT: Arby's	S.F.			DESCRIPTION
LOCATION: VARIOUS				
FILE LOCATION: DWG \USI\ARBY'S\	FILE #: 2563 REV7	DWG. TYPE: PRESENTATION	DATE: 09-24-08	
SALES: K. SEBREE	SCALE:	DESIGNER: J.DEFOOR	PAGE 1-OF-2	

PIVOTING CANOPY

Note: This is an original drawing by Uni-Structures, Inc. And submitted for your personal use in connection with a project being planned for you by Uni-Structures, Inc. And is not to be shown to anyone outside your organization, nor is it to be used, copied, reproduced, or exhibited in any fashion

TY·LIN INTERNATIONAL
engineers | planners | scientists

April 29, 2015

Planning & Development Committee
City of Batavia
One Batavia City Centre
Batavia, NY 14020

ATTN: Planning & Development Board Members

RE: Proposed Arby's – Traffic Analysis
Vernon Avenue / West Main Street
Batavia, New York

Dear Members of the Planning & Development Board:

T.Y. Lin International (TYLI) has conducted a review of the traffic associated with the proposed new Arby's restaurant in the City of Batavia, New York. The 0.568 acre project site is located on the north side of West Main Street (NYS Route 5) approximately 1,500 feet west of the current Arby's location on West Main Street. The proposed site is bound to the west by Vernon Avenue, a residential street that runs between West Main Street and Richmond Avenue and to the east by a car dealership. Currently, three residential homes are located on the property. Planned improvements include razing the three structures for the proposed development which consists of a 2,100 s.f. Arby's restaurant with a drive-through window, 24 parking spaces and two full access driveways. One driveway access point is proposed along the east side of the site's property line on West Main Street approximately 150 feet east of Vernon Avenue and a second access driveway is proposed on Vernon Ave. approximately 100 feet north of West Main Street. The site plan for the proposed retail development is included in **Attachment 1**.

This study was conducted in order to estimate the anticipated change in peak hour traffic associated with the proposed development at the intersection of Vernon Avenue / West Main Street, the proposed driveways and to identify the expected traffic patterns. It is anticipated that the property, where the existing 1,200 square foot Arby's restaurant is located (approximately 3 ½ blocks to the east), will be redeveloped, therefore, no trips were removed from the network.

Existing Traffic Conditions

West Main Street is an urban minor arterial that transverses primarily east-west within the project area. Based on data collected by New York State Department of Transportation (NYSDOT) and detailed in the Traffic Count Hourly Report, the two-way Annual Average Daily Traffic (AADT) on West Main Street just west of the project location is estimated at 23,600 vehicles. Within the project area West Main Street is comprised of two lanes in each direction with a shared two way left turn lane. The posted speed limit is 30 MPH. The hourly traffic volumes are included in **Attachment 2**.

Future (Build) Traffic Volumes

The most commonly used source of trip generation information is the Institute of Transportation Engineers' (ITE) Report Trip Generation, 9th Edition. The ITE Trip Generation Report contains vehicle trip data for many types of developments, including Land Use Codes for Fast Food Restaurants with a Drive-Through Window (934). The trip generation rates documented by the ITE are expressed as the number of vehicles generated per 1,000 square feet of gross floor building area and are based on the peak hour of the adjacent street traffic. Trip generation calculations are provided in **Attachment C**. The vehicle trip projections for the anticipated development use are summarized in **Table 1** for the weekday evening and Saturday midday peak hour periods.

Table 1: Trip Generation Summary

Land Use	Size	Evening Peak Hour			Saturday Midday Peak Hour		
		Enter	Exit	Total	Enter	Exit	Total
Fast Food Restaurant with a Drive-Through Window (LUC 934)	2,100	36	33	69	63	61	124

Some of the trips to the proposed development would be drawn from the existing traffic stream passing by the site on West Main Street. These vehicles, referred to as "pass-by trips", represent intermediate stops at the site on the way to another trip destination. An ITE publication called the Trip Generation Handbook (2004) indicates that the average pass-by rate for similar sized restaurant with a drive through window is about 50% of the total site-generated traffic during the peak hours.

The trip projections for Arby's, categorized by primary (new) and pass-by trips, are summarized in **Table 2**. Refer to **Attachment C** for trip generation calculations.

Table 2: Trip Generation Primary/Pass-by Summary (LUC 934)

Land Use	Evening Peak Hour			Saturday Midday Peak Hour		
	Enter	Exit	Total	Enter	Exit	Total
Primary (50%)	18	17	35	32	31	63
Pass-by (50%)	18	16	34	31	30	61
Total	**36**	**33**	**69**	**63**	**61**	**124**

Of the trips entering Arby's, approximately 50% are anticipated to use the drive- through window. Based on the layout of the site, a majority of the vehicles using the drive-through window are anticipated to enter the site via the entrance on Vernon Avenue. As indicated on the site plan, the drive-through stacking lane allows for seven vehicles to stack between the order board and the service window.

The projected traffic for the proposed new development was distributed to the proposed driveways and to the intersection of West Main Street and Vernon Avenue in consideration of the existing traffic patterns and logical routing patterns. Based on the peak hour traffic volume on West Main Street, approximately 54 percent of the site's trips are anticipated to originate from the east and approximately 46 percent of the site's trips are anticipated to originate from the west. Due to the site's proposed configuration, approximately 40 percent of the site's exiting traffic is presumed to turn left out of the driveway onto Vernon Avenue and turn left onto West Main Street. The estimated vehicle trips for the proposed Arby's during the weekday PM and Saturday midday peak hours are identified in **Figure 1** and **Figure 2**, respectively and are included in **Attachment C**.

Recommendations

Based upon existing traffic patterns on West Main Street and the proposed one-way site circulation, full access to West Main Street as identified on the proposed site plan for Arby's is recommended. In conclusion, two driveways are recommended for the site; one on West Main Street (one entering lane, one exiting lane) and one on Vernon Avenue (one entering lane, one exiting lane).

Please contact our office at (585) 512-2000 if you have any questions, or if any additional information is needed.

Sincerely,
T.Y. Lin International Engineering

Christine A. Bianchi

Christine A. Bianchi
Project Engineer

CAB/sw

Attachments

u:\public\projects\batavia arbys\tripgenerationanalysis042915.doc

ATTACHMENT 1

Site Plan

T·Y·LIN INTERNATIONAL

engineers | planners | scientists

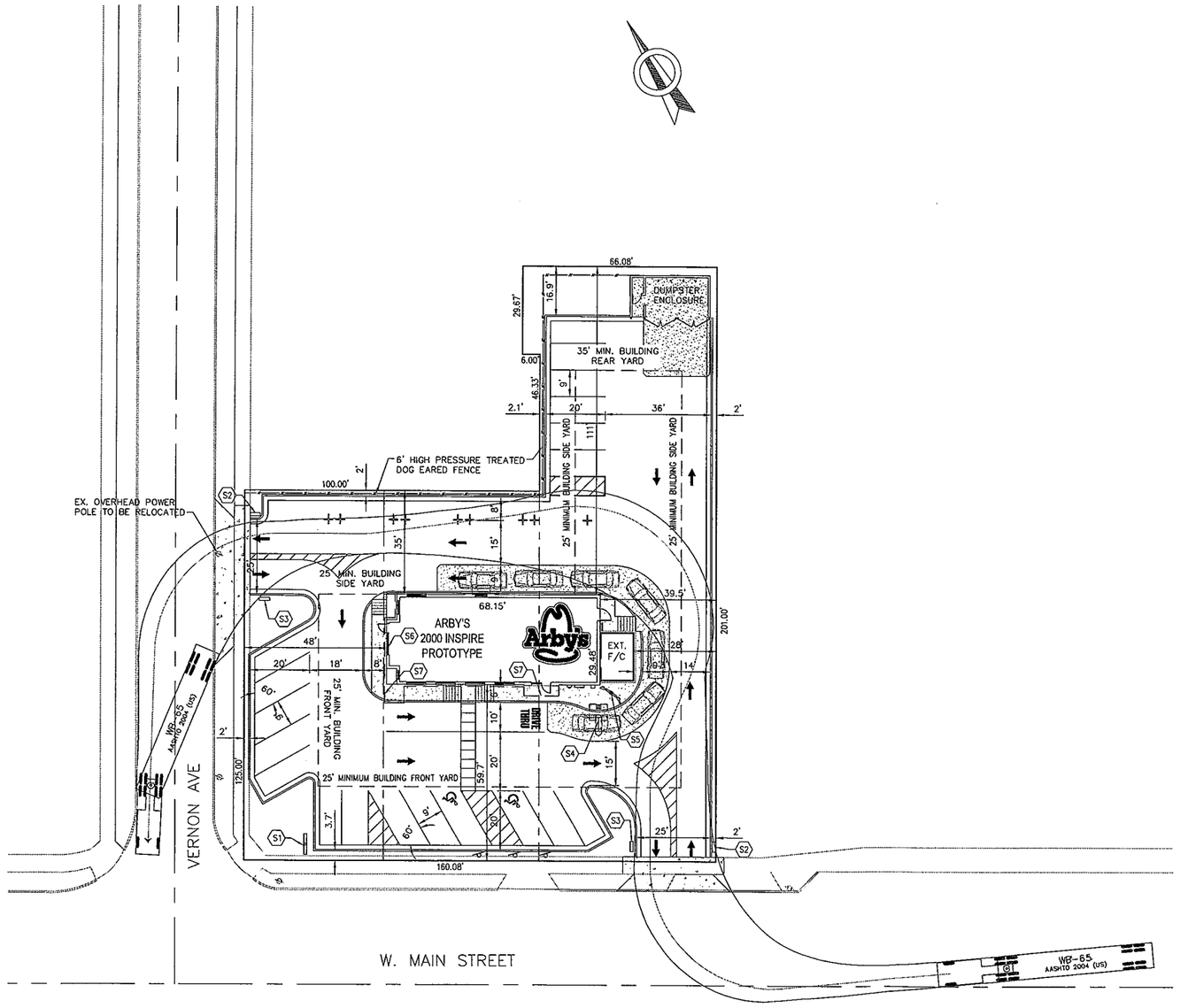

SITE DATA		
TAX ACCOUNT NUMBERS: 84.006-3-43, 84.006-3-44, 84.006-3-36		
PROPOSED LEASE AREA: 0.568 ACRES (24,754 SQ. FT.)		
CURRENT ZONING: C-2 (GENERAL COMMERCIAL DISTRICT)		
ZONING REQUIREMENTS	REQUIRED	PROPOSED
MINIMUM LOT AREA	15,000 SQ. FT.	24,754 SQ. FT.
MINIMUM LOT WIDTH	125 FT.	125 FT.
MAX. BUILDING/LOT COVERAGE	20% (6,815 SQ. FT.)	8.5% (2,100 SQ. FT.)
MAX. BUILDING HEIGHT	18 FT.	19.33 FT.
BUILDING SETBACKS		
FRONT	25 FT.	48 FT.
SIDE	25 FT.	28 FT.
REAR	35 FT.	111 FT.
PARKING SETBACKS		
FRONT	10 FT.	2 FT.
SIDE	10 FT.	2 FT.
REAR	10 FT.	16.9 FT.
DRIVE AISLES ONE-WAY TWO-WAY	 20 FT. 24 FT.	 – 25 FT.
MINIMUM DRIVEWAY SETBACK FROM SIDE PROPERTY LINE	20 FT.	2 FT.
PARKING STALL SIZE 60° PARKING 90° PARKING	 8'x19' 8'x19'	 9'x20' 9'x20'
PARKING RESTAURANT: MIN. PARKING SPACES RESTAURANT, W/DRIVE THRU: 4 SPACES PER 100 S.F. OF NET FLOOR AREA		
TOTAL SPACES	39	24

GENERAL NOTES

1. COORDINATE START-UP AND ALL CONSTRUCTION ACTIVITIES WITH OWNER.
2. CONSTRUCTION METHODS AND OWNER'S MATERIALS NOT SPECIFIED IN THESE PLANS ARE TO MEET OR EXCEED THE TOWN STANDARD SPECIFICATIONS.
3. THE CONTRACTOR SHALL CONDUCT THE WORK IN A MANNER THAT WILL INSURE, AS FAR AS PRACTICABLE, THE LEAST OBSTRUCTION TO TRAFFIC AND SHALL PROVIDE FOR THE CONVENIENCE AND SAFETY OF THE GENERAL PUBLIC ALONG AND ADJACENT TO ROADS IN THE CONSTRUCTION AREA, IN AN ADEQUATE AND SATISFACTORY MANNER.
4. THE CONTRACTOR SHALL LOCATE, MARK, SAFEGUARD AND PRESERVE ALL SURVEY CONTROL MONUMENTS AND R.O.W. MONUMENTS IN THE AREAS OF CONSTRUCTION.
5. THE CONTRACTOR IS RESPONSIBLE TO ENSURE THAT ALL REQUIRED INSPECTIONS AND/OR CERTIFICATIONS REQUIRED BY CODES AND/OR THE JURISDICTIONAL AUTHORITY ARE COMPLETED.
6. THE CONTRACTOR SHALL COORDINATE WITH ALL UTILITY COMPANIES TO DETERMINE EXACT POINT OF SERVICE CONNECTION AT EXISTING UTILITY. REFER TO THE BUILDING ELECTRICAL AND PLUMBING DRAWINGS FOR UTILITY SERVICE ENTRANCE LOCATIONS, SIZES, AND CIRCUITING.
7. ALL ELEVATIONS SHOWN ARE IN REFERENCE TO THE BENCHMARK AND MUST BE VERIFIED BY THE GENERAL CONTRACTOR AT GROUND BREAK.
8. FINISH WALK AND CURB ELEVATIONS SHALL BE 6" ABOVE FINISH PAVEMENT, UNLESS OTHERWISE NOTED.
9. ALL ON-SITE CONCRETE WALKS TO BE 4" THICK AND BROOM FINISHED.

BUSINESS SIGN DATA TABLE						
SIGN ID	SIGN QUANTITY	SIGN TYPE	SIGN MODEL	NO. OF SIDES	SIGN AREA PER SIDE (SQ. FT.)	TOTAL AREA (SQ. FT.)
S1	1	POLE SIGN "ARBY'S"	INTERNALLY ILLUMINATED	2	45.5 SQUARED	45.5
S2	2	DIRECTIONAL (4' POLE) "ENTER"	INTERNALLY ILLUMINATED	2	3.1 SQUARED	3.1
S3	2	DIRECTIONAL (4' POLE) "EXIT"	INTERNALLY ILLUMINATED	2	3.1 SQUARED	3.1
S4	1	DRIVE-THRU CANOPY	CP-2100	1	N/A	N/A
S5	1	POLE "MENU BOARD"	INTERNALLY ILLUMINATED	1	45.0 SQUARED	45.0
S6	1	WALL LOGO "ARBY'S"	INTERNALLY ILLUMINATED	1	17.67 SQUARED	17.67
S7	2	CANOPY "ARBY'S"	INTERNALLY ILLUMINATED	1	6.88 SQUARED	6.88
					TOTAL BLDG. SIGNAGE	24.55

20 10 0 20 40 60
SCALE IN FEET

Dig Safely. New York
800-962-7962
www.digsafelynewyork.org
- Call Before You Dig
- Wait The Required Time
- Confirm Utility Response
- Respect the Marks
- Dig With Care

ARBY'S RESTAURANT GROUP, INC.
1155 PERIMETER CENTER WEST
ATLANTA, GEORGIA 30338

NO.	DATE:	DESCRIPTION
6		
5		
4		
3		
2		
1		REVISIONS

DATE

TYLIN INTERNATIONAL
255 EAST AVENUE
ROCHESTER, NY 14604
(585) 512-2800

DRAWING TITLE: SITE PLAN
PROJECT NAME: ARBY'S RESTAURANT
316-320 WEST MAIN STREET, CITY OF BATAVIA, GENESEE COUNTY, NY
CLIENT: VIELE CONSTRUCTION COMPANY
61 SWAN STREET, #3
BATAVIA, NY 14020

PROJECT NO.:	PROJ. MGR.:
43.XXXX.00	RLB
DATE:	DRWN. BY:
4/30/15	DMD
SCALE:	CHKD. BY:
1"=20'	RLB

DRAWING NO: C-1
2 OF 7

ATTACHMENT 2

Volume Calculations

T·Y·LIN INTERNATIONAL

engineers | planners | scientists

Project Name:Arby's - Batavia, NY (Exisitng Location)
Project #:

By: CAB

Trip Generation Calculations

1,200 SF Fast-Food Restaurant w/ Drive-Through Window (LUC 934)

Weekday AM

T=	45.42	(X)	+		0
T=	45.42	(1.20)	+		0
T=	55 Trips				CHECK
	entering =	51%		28.05	28
	exiting =	49%		26.95	27
				55	OK

Weekday PM

T=	32.65	(X)	+		0
T=	32.65	(1.20)	+		0
T=	39 Trips				CHECK
	entering =	52%		20.28	20
	exiting =	48%		18.72	19
				39	OK

Saturday Midday

T=	59.00	(X)	+		0
T=	59.00	(1.20)	+		0
T=	71 Trips				CHECK
	entering =	51%		36.21	36
	exiting =	49%		34.79	35
				71	OK

Summary

	AM Peak Hour			PM Peak Hour			SAT Peak Hour		
	Enter	Exit	Total	Enter	Exit	Total	Enter	Exit	Total
Fast-Food	28	27	55	20	19	39	36	35	71

ITE Trip Generation, 9th edition

Table 1 - Trip Generation

Land Use	Weekday Morning			Weekday Evening			Saturday Midday		
	Enter	Exit	Total	Enter	Exit	Total	Enter	Exit	Total
Fast Food Resturant (with drive through) - 1,200 SF									
Primary Trips	14	14	28	10	10	20	18	18	36
Pass By Trips (50% pm)	14	13	27	10	9	19	18	17	35
Total	28	27	55	20	19	39	36	35	71

New York State Department of Transportation
Traffic Count Hourly Report

ROUTE #: **NY 5** ROAD NAME: **W MAIN ST** FROM: **BATAVIA LN ST 63 OLAP** TO: **RT 98 START 33 OLAP** COUNTY: **Genesee**
DIRECTION: Eastbound FACTOR GROUP: 30 REC. SERIAL #: 8397 FUNC. CLASS: 16 CITY: **BATAVIA**
STATE DIR CODE: 1 WK OF YR: 13 PLACEMENT: 75' W of Woodrow Rd NHS: no BIN:
DATE OF COUNT: 03/24/2008 @ REF MARKER: 5 41032002 JURIS: NYSDOT RR CROSSING:
NOTES LANE 0: EB Two Lanes 30 MPH ADDL DATA: CC Stn: HPMS SAMPLE:
COUNT TYPE: AXLE PAIRS BATCH ID: R04-R04RO4TSWW13
COUNT TAKEN BY: ORG CODE: TST INITIALS: TST PROCESSED BY: ORG CODE: R04 INITIALS: RHC

DATE	DAY	12 TO 1 AM	1 TO 2 AM	2 TO 3 AM	3 TO 4 AM	4 TO 5 AM	5 TO 6 AM	6 TO 7 AM	7 TO 8 AM	8 TO 9 AM	9 TO 10 AM	10 TO 11 AM	11 TO 12 AM	12 TO 1 PM	1 TO 2 PM	2 TO 3 PM	3 TO 4 PM	4 TO 5 PM	5 TO 6 PM	6 TO 7 PM	7 TO 8 PM	8 TO 9 PM	9 TO 10 PM	10 TO 11 PM	11 TO 12 PM	DAILY TOTAL	DAILY HIGH COUNT	DAILY HIGH HOUR
1	S																											
2	S																											
3	M																											
4	T																											
5	W																											
6	T																											
7	F																											
8	S																											
9	S																											
10	M																											
11	T																											
12	W																											
13	T																											
14	F																											
15	S																											
16	S																											
17	M																											
18	T																											
19	W																											
20	T																											
21	F																											
22	S																											
23	S																											
24	M																	868	817	698	574	473	339	205	120			
25	T	66	37	32	20	61	143	297	622	636	580	706	710	902	829	829	844	868	881	712	584	379	349	202	134	11423	902	12
26	W	59	33	34	40	52	165	295	608	625	568	605	757	841	841	904	859	904	900	787	668	473	371	225	146	11760	904	14
27	T	62	45	37	31	54	144	287	627	637	593	690	780	855	846	893	887	988										
28	F																											
29	S																											
30	S																											
31	M																											

AVERAGE WEEKDAY HOURS (Axle Factored, Mon 6AM to Fri Noon)

																									ADT
61	37	33	29	55	148	287	607	620	568	654	734	849	822	857	846	889	849	717	597	433	346	207	130	11375

DAYS Counted	HOURS Counted	WEEKDAYS Counted	WEEKDAY Hours	AVERAGE WEEKDAY High Hour	AVERAGE WEEKDAY % of day	Axle Adj. Factor	Seasonal/Weekday Adjustment Factor	ESTIMATED (one way)
4	73	4	73	889	8%	0.980	1.003	**AADT 11341**

New York State Department of Transportation

Traffic Count Hourly Report

ROUTE #: **NY 5** ROAD NAME: **W MAIN ST**
DIRECTION: Westbound FACTOR GROUP: 30
STATE DIR CODE: 2 WK OF YR: 13
DATE OF COUNT: 03/24/2008
NOTES LANE 0: WB Two lanes 30 MPH

FROM: **BATAVIA LN ST 63 OLAP** TO: **RT 98 START 33 OLAP**
REC. SERIAL #: 9021 FUNC. CLASS: 16
PLACEMENT: 75' W of Woodrow Rd NHS: no
@ REF MARKER: 5 41032002 JURIS: NYSDOT
ADDL DATA: CC Stn:
COUNT TYPE: AXLE PAIRS BATCH ID: R04-R04RO4TSWW13

COUNTY: **Genesee**
CITY: **BATAVIA**
BIN:
RR CROSSING:
HPMS SAMPLE:

COUNT TAKEN BY: ORG CODE: TST INITIALS: TST
PROCESSED BY: ORG CODE: R04 INITIALS: RHC

DATE	DAY	12 TO 1 AM	1 TO 2 AM	2 TO 3 AM	3 TO 4 AM	4 TO 5 AM	5 TO 6 AM	6 TO 7 AM	7 TO 8 AM	8 TO 9 AM	9 TO 10 AM	10 TO 11 AM	11 TO 12 AM	12 TO 1 PM	1 TO 2 PM	2 TO 3 PM	3 TO 4 PM	4 TO 5 PM	5 TO 6 PM	6 TO 7 PM	7 TO 8 PM	8 TO 9 PM	9 TO 10 PM	10 TO 11 PM	11 TO 12 PM	DAILY TOTAL	DAILY HIGH COUNT	DAILY HIGH HOUR
1	S																											
2	S																											
3	M																											
4	T																											
5	W																											
6	T																											
7	F																											
8	S																											
9	S																											
10	M																											
11	T																											
12	W																											
13	T																											
14	F																											
15	S																											
16	S																											
17	M																											
18	T																											
19	W																											
20	T																											
21	F																											
22	S																											
23	S																											
24	M																	993	985	664	630	387	288	181	135			
25	T	92	51	34	30	54	133	292	491	572	665	764	905	1014	912	920	1115	1076	1006	732	554	442	311	145	104	12414	1115	15
26	W	76	45	31	30	58	131	257	429	593	664	747	846	1001	903	920	1154	1073	1046	811	603	539	342	220	143	12662	1154	15
27	T	83	49	75	30	47	138	275	407	658	665	885	906	1062	906	940	1101	1134										
28	F																											
29	S																											
30	S																											
31	M																											

AVERAGE WEEKDAY HOURS (Axle Factored, Mon 6AM to Fri Noon)

12 TO 1 AM	1 TO 2 AM	2 TO 3 AM	3 TO 4 AM	4 TO 5 AM	5 TO 6 AM	6 TO 7 AM	7 TO 8 AM	8 TO 9 AM	9 TO 10 AM	10 TO 11 AM	11 TO 12 AM	12 TO 1 PM	1 TO 2 PM	2 TO 3 PM	3 TO 4 PM	4 TO 5 PM	5 TO 6 PM	6 TO 7 PM	7 TO 8 PM	8 TO 9 PM	9 TO 10 PM	10 TO 11 PM	11 TO 12 PM	ADT
82	47	46	29	52	131	269	433	596	652	783	868	1005	889	908	1101	1048	992	721	584	447	308	178	124	12293

DAYS Counted	HOURS Counted	WEEKDAYS Counted	WEEKDAY Hours	AVERAGE WEEKDAY High Hour	AVERAGE WEEKDAY % of day	Axle Adj. Factor	Seasonal/Weekday Adjustment Factor
4	73	4	73	1101	9%	0.980	1.003

ESTIMATED (one way)

AADT
12256

ATTACHMENT 3

Traffic Figures

T·Y·LIN INTERNATIONAL

engineers | planners | scientists

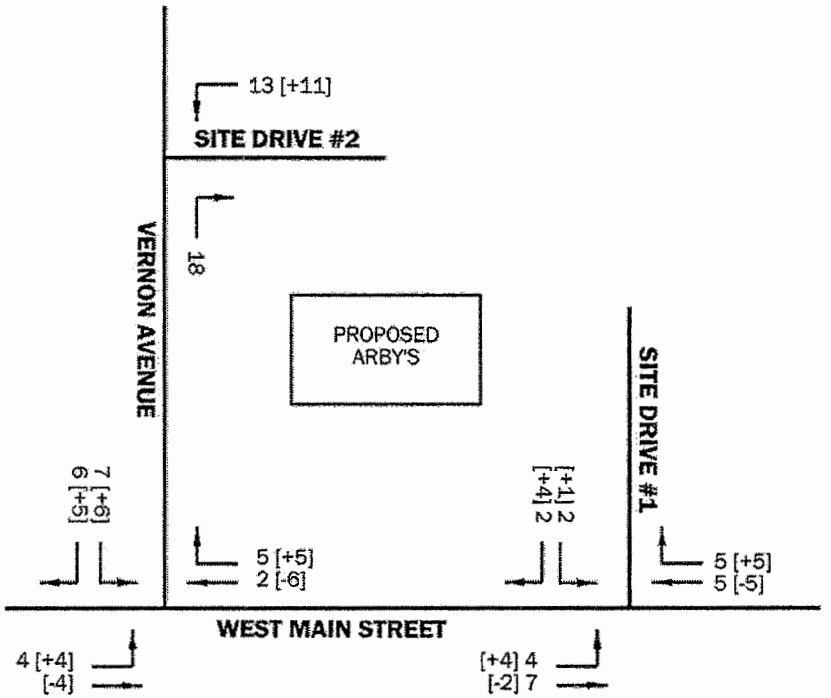

LEGEND

XX - PEAK HOUR TRIPS
[XX] - PASS-BY TRIPS

T·Y·LIN INTERNATIONAL
255 EAST AVENUE
ROCHESTER, NY 14604
(585) 512-2000

ARBY'S RESTAURANT | FIGURE 1

TRIP GENERATION
WEEKDAY EVENING PEAK HOUR
BATAVIA, NY

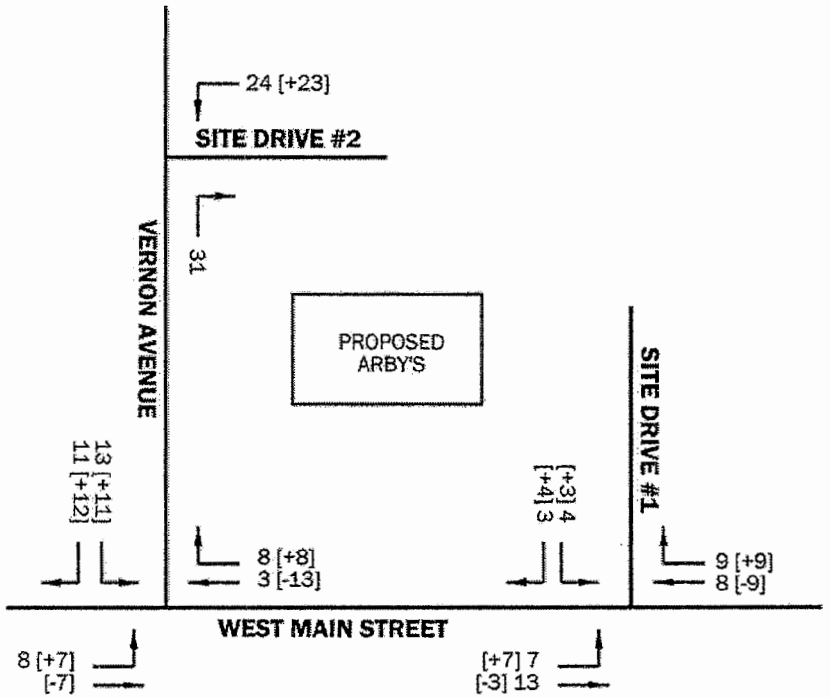

LEGEND

XX - PRIMARY TRIP
[XX] - PASS-BY TRIP

T·Y·LIN INTERNATIONAL
255 EAST AVENUE
ROCHESTER, NY 14604
(585) 512-2000

ARBY'S RESTAURANT | FIGURE 2

TRIP GENERATION
SATURDAY MIDDAY PEAK HOUR
BATAVIA, NY

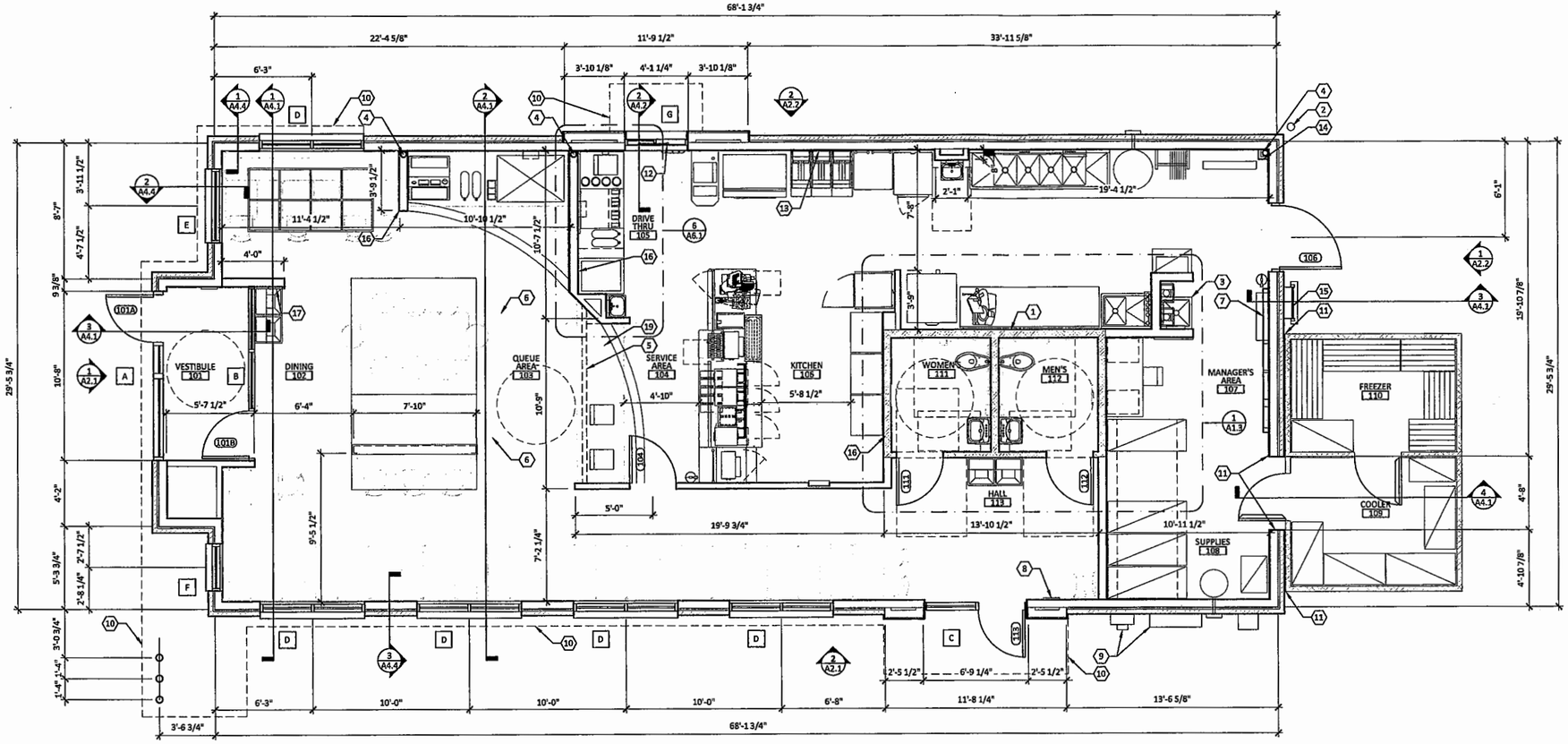

ARCHITECTURAL FLOOR PLAN

1/4" = 1'-0"

OWNER FURNISHED ITEM LIST

THE FOLLOWING ITEMS MAY OR MAY NOT BE SUPPLIED BY THE OWNER/FRANCHISEE. G.C. IS TO CONFIRM WITH OWNER THAT THESE ITEMS ARE BEING SUPPLIED AND/OR INSTALLED BY OWNER. PLEASE CONTACT OWNER IF YOU HAVE ANY QUESTIONS ABOUT THIS LIST. ON SHEET SD-1 IN THE ARCHITECTURAL SPECIFICATIONS THERE IS ALSO A LIST THAT OUTLINES SEVERAL OWNER SUPPLIED ITEMS THAT ARE INCLUDED IN THIS LIST, THE SAME INSTRUCTIONS APPLY TO THAT LIST.

STOREFRONT GLAZING
STANDARD DRIVE-THRU WINDOW
DRIVE-THRU MUSIC SYSTEM
HVAC UNITS
KITCHEN EQUIPMENT
STANDARD SMALLWARES
ATS CASH MACHINE
REGISTERS
HOOD SYSTEM
BULK CO2
DRINK SYSTEM
DRINK EQUIPMENT INSTALLATION
INTERIOR MENU BOARD
EXTERIOR MENU BOARD
MENU BOARD CANOPY
AWNINGS/CANOPY
DECOR PACKAGE
- DECOR LIGHTING
- SEATING
- PAINT & WALL COVERINGS
- FLOORING

MAX. OCCUPANCY SIGNAGE
CUSTOMER BELL
STORE SIGNAGE
LOT LIGHTING (F)
ROOF LIGHTING
FIRE EXTINGUISHERS

GENERAL FLOOR PLAN NOTES

A. VERIFY ALL UNMARKED WALLS WITH ARCHITECT.

B. GENERAL CONTRACTOR TO PROVIDE ALL WALLS INDICATED ON FLOOR PLAN.

C. GENERAL CONTRACTOR TO PROVIDE ALL ROOF PATCHING AROUND MECHANICAL EQUIPMENT. VERIFY ROOF WARRANTY REQUIREMENTS WITH OWNER.

D. PROVIDE 2x6 FIRE RETARDANT TREATED WOOD BLOCKING IN PARTITIONS TO SUPPORT ALL CASEWORK , DOOR WALL STOPS, ELECTRICAL AND MECHANICAL DEVICES, AND FIRE EXTINGUISHERS.

E. ELECTRICAL CONTRACTOR TO COORDINATE LOCATIONS WITH MECHANICAL EQUIPMENT AND FIRE PROTECTION PRIOR TO STARTING WORK.

F. GENERAL CONTRACTOR TO PATCH ALL ROOF PENETRATIONS MADE BY THIS PROJECT WITH ROOFING CONTRACTOR.

G. SEE SECTION A4.x FOR WALL SECTIONS AND DETAILS.

H. SEE DECOR DRAWINGS FOR FINISH SPECIFICATIONS AND PLAN.

I. SEE SHEETS A7.1 FOR REFLECTED CEILING PLAN.

J. SEE SHEET A8.1 FOR DOOR SCHEDULE.

K. SEE SHEET A8.2 FOR WINDOW SCHEDULE.

L. VERIFY ALL OWNER SUPPLIED EQUIPMENT BEFORE ROUGH-INS ARE COMPLETED & GYP. BOARD IS INSTALLED.

M. ELECTRICAL CONTRACTOR TO COORDINATE LIGHT FIXTURE LOCATIONS WITH MECHANICAL EQUIPMENT PRIOR TO INSTALLATION.

N. METAL STUD CONTRACTOR TO COORDINATE FRAMING AROUND HVAC DUCTS, PIPES, CONDUITS AND OTHER ITEMS LOCATED ABOVE THE CEILING.

O. SOUND ATTENUATION BLANKETS TO EXTEND FROM SLAB TO TOP MTL TRACK AND FROM CORNER TO CORNER UNLESS OTHERWISE NOTED.

P. THERMAL AND ACOUSTICAL INSULATION IN FLOORS, WALLS AND CEILING TO COMPLY WITH STATE AND LOCAL CODE REQUIREMENTS FOR FLAME SPREAD AND SMOKE DEVELOPMENT RATINGS.

Q. HOT-DIPPED GALVANIZED ADJUSTABLE WALL TIES @ 16" O.C. (VERT.) & 24" O.C. (HORIZ.) TO BE ANCHORED THROUGH TO METAL STUD FRAMING. PROVIDE TAPE SEALANT AT ALL ANCHOR LOCATIONS.

R. ALL FLASHING AND SEAMS BETWEEN SHEATHING IN COMPOSITE METAL STUD WALL CONSTRUCTION CONDITIONS TO BE TAPED & SEALED WITH TAPE SEALANT.

S. ALL SEAMS IN FOIL FACED (FSK-25) BATT INSULATION TO BE TAPED TO ENSURE CONTINUITY OF VAPOR BARRIER.

T. ALL SHEATHING THAT IS TO RECEIVE FULLY ADHERED ROOF MEMBRANE IS TO BE ATTACHED TO METAL FRAMING BY THE USE OF NON-REVERSING SCREWS. NO NAIL FASTENERS ARE PERMITTED.

U. EC TO PROVIDE CONDUIT & PULL STRINGS FOR OWNER SUPPLIED COMMUNICATION.

V. PROVIDE TACTILE EXIT SIGNAGE AT EACH DOOR TO AN EGRESS STAIRWAY, AN EXIT PASSAGEWAY AND ALL EXIT DISCHARGE POINTS.

W. ALL MATERIALS SPECIFIED ARE TO BE INSTALLED IN ACCORDANCE WITH MANUFACTURER'S INSTRUCTIONS AND SPECIFICATIONS. CONTRACTOR IS TO CONSTRUCT THE PROJECT ACCORDING TO THE CONTRACT DOCUMENTS. ANY DEVIATION FROM THE INTENT OF THE CONTRACT DOCUMENTS WITHOUT ARCHITECT OR OWNER APPROVAL ARE AT THE CONTRACTOR'S OWN RISK.

X. ALL EXTERIOR WALLS ARE 5 1/2" STUDS U.N.O.

Y. ALL INTERIOR WALLS ARE 3 1/2" STUDS U.N.O.

Z. ALL INTERIOR DIMENSIONS GIVEN ARE FROM FACE OF STUD TO FACE OF STUD UNLESS OTHERWISE NOTED.

AA. VERIFY LOCATION OF ALL EQUIPMENT AND VERIFY SIZES, WALL OPENINGS, AND SUPPORT REQUIREMENTS WITH MANUFACTURE. PROVIDE REINFORCEMENT AS REQUIRED BY MANUFACTURER.

AB. ALL DOORS TO BE LOCATED 4" FROM ADJACENT WALL OR COUNTER, OR CENTERED IN WALL UNLESS OTHERWISE NOTED.

AC. ALL WALLS TO RECEIVE LAMINATE MUST HAVE PLYWOOD BACKING IN LIEU OF GYP. BD. COORDINATE LOCATION WITH DECOR DRAWINGS.

AD. PROVIDE 1/2" M.R. GYP.BD. AT RESTROOM WALLS BEHIND FIXTURES.

AE. LOW WALLS BELOW SERVICE COUNTER AND SELF SERVE DRINK STATION TO BE 2X4 FRAMING W/ 1/2" GYP.BD. AND FRP AT BACK OF HOUSE EXPOSED SIDES AND 1/2" PLYWOOD AT FRONT OF HOUSE SIDE. VERIFY EXACT CONFIGURATION WITH DECOR DRAWINGS.

AF. COUNTER DETAILS BY DECOR SUPPLIER.

AG. 2X2 FULL HEIGHT STAINLESS STEEL CORNER GUARDS ON ALL OUTSIDE CORNERS IN KITCHEN. PROVIDED AND INSTALLED BY K.E.S.

AH. VERIFY LOCATION OF FIRE EXTINGUISHERS W/ LOCAL FIRE MARSHALL.

AI. FIRE EXTINGUISHER NOTE: THE GENERAL CONTRACTOR IS TO CONTRACT WITH THE LOCAL FIRE SUPPRESSION INSTALLER TO PROVIDE AND INSTALL PORTABLE FIRE EXTINGUISHER(S) AS FOLLOWS: INSTALL ONE (1) PORTABLE (4-A, 40-B, C) FIRE EXTINGUISHER. TO BE INSTALLED ON THE KITCHEN SIDE OF THE WALL AT THE PULL SIDE OF DOOR 5. INSTALL ONE (1) PORTABLE (CLASS K) FIRE EXTINGUISHER. TO BE INSTALLED ON THE LATCH SIDE OF DOOR 3. THE GENERAL CONTRACTOR IS TO VERIFY SIZE, QUANTITY AND LOCATION W/ LOCAL FIRE MARSHAL PRIOR TO INSTALLATION AND CONFIRM WITH OWNER WHO IS TO PROVIDE THEM.

AJ. PROVIDE CEMENTITIOUS BOARD FROM BASE OF WALL TO 24" A.F.F. IN THE ENTIRE KITCHEN AREA AND IN THE RESTRODMS.

AK. 2x BLOCKING TO BE PROVIDED AT ALL SINKS, GRAB BARS, MIRRORS, DISPENSERS, AND HAND DRYERS PER MFR. SPECIFICATIONS.

CODED NOTES

1. SOUND ATTENUATION BATT INSULATION IN WALL AROUND RESTROOMS, TYP.
2. 6" DIA. CONCRETE FILLED STEEL PIPE BOLLARD @ 48" A.F.F.
3. FIBERGLASS FLOOR MOUNTED MOP SINK.
4. INTERIOR ROOF DRAIN. CONNECT TO LOCAL STORM OR EXTEND THROUGH CONC. CURB TO DISCHARGE AT GRADE. REFER TO CIVIL DRAWINGS.
5. LINE OF WALL BELOW SERVICE COUNTER. REFER TO DECOR DRAWINGS FOR EXACT LOCATION.
6. REFER TO DECOR DRAWINGS FOR ELEVATIONS OF WALLS, PLANTERS AND DIVIDERS.
7. FURR OUT WALL 4" (ACTUAL) FOR ELECTRICAL PANELS.
8. INSTALL MAXIMUM OCCUPANCY SIGNAGE (WHERE REQUIRED). SIGNAGE SHALL BE INSTALLED AT 60" A.F.F. THE G.C. IS TO VERIFY THE SIZE, QUANTITY AND LOCATION(S) OF SIGNAGE WITH LOCAL FIRE MARSHAL PRIOR TO INSTALLATION. (G.C. TO CONFIRM WITH OWNER THAT THIS ITEM IS TO BE PROVIDED BY OWNER.)
9. ELECTRIC PANELS AND METER. REFER TO ELECTRICAL DRAWINGS.
10. CANOPY ABOVE.
11. STAINLESS STEEL CLOSURE PIECE PROVIDED BY CODLER MANUFACTURER. INSTALLED BY G.C. CAULK TO ADJACENT SURFACE.
12. DRIVE-THRU WINDOW. COLOR: CLEAR ANODIZED, FURNISHED AND INSTALLED BY OWNER. POWER HOOK UP BY G.C. (G.C. TO CONFIRM WITH OWNER THAT THIS ITEM IS TO BE PROVIDED BY OWNER.)
13. INSTALL STAINLESS STEEL PANEL BEHIND THE FRYER HOOD AND OVEN HOOD. SEE EQUIPMENT ELEVATIONS ON SHEETS AND A-10 FOR SIZE AND PLACEMENT. (G.C. PROVIDED AND INSTALLED.)
14. 6" X 6" R.O. CHASE WITH 2X2 FRAMING FOR ROOF DRAIN. CONNECT TO LOCAL STORM OR EXTEND THROUGH CONC. CURB TO DISCHARGE AT GRADE. REFER TO CIVIL.
15. ROOF ACCESS LADDER.
16. LOCATION OF INTERIOR SHEAR WALLS, REFER TO STRUCTURAL DRAWINGS.
17. G.C. IS TO INSTALL OWNER FURNISHED "CUSTOMER BELL" AT 54" A.F.F. ALIGN WITH EDGE OF WALL TO PREVENT CONFLICT WITH TRASH ENCLOSURE. (G.C. TO CONFIRM WITH OWNER THAT THIS ITEM IS TO BE PROVIDED BY OWNER
18. G.C. IS TO COORDINATE THE LOCATION OF THE SECURING BOLTS FOR THE SAFE WITH THE MANUFACTURERS REQUIREMENTS.

r e d
architecture + planning
855 grandview ave.
suite 295
columbus, ohio 43215
tel: 614.487.8770
fax: 614.487.8777

PROPRIETARY INFORMATION NOTICE:
THESE PROTOTYPICAL DOCUMENTS MAY REQUIRE REVISIONS TO CONFORM TO LOCAL, STATE, AND FEDERAL CODES, ORDINANCES OR OTHER CONDITIONS. THE DESIGN CONCEPTS EMBODIED IN THESE DOCUMENTS ARE SPECIFICALLY FOR THIS PROJECT. INFORMATION CONTAINED HEREIN REMAINS THE SOLE PROPERTY OF ARBY'S RESTAURANT GROUP, IS CONFIDENTIAL, AND PROPRIETARY AND IS NOT TO BE COPIED, REPRODUCED, DISCLOSED OR OTHERWISE TRANSFERED TO OTHER PARTIES IN ANY FORM WHATSOEVER WITHOUT THE EXPRESS WRITTEN CONSENT OF ARBY'S RESTAURANT GROUP.

Arby's

Copyright© 2014 by Arby's Restaurant Group

NOT FOR CONSTRUCTION, TO BE REFERENCE ONLY

ARBY'S RESTAURANT GROUP
INSPIRE PROTOTYPE - 2014 VERSION
PROJECT ADDRESS
CITY, STATE 12345

PROJECT NUMBER: ARG064

ISSUE	DATE
PROTOTYPE	JUNE 25, 2014

ARCHITECTURAL FLOOR PLAN

SHEET: A1.1

6/24/2014 3:19 PM

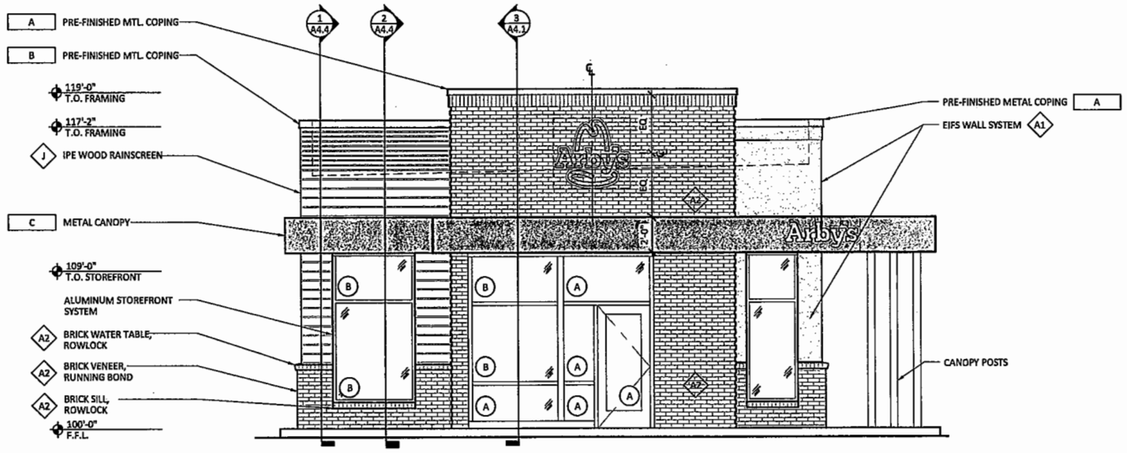

1 A2.1 **FRONT ELEVATION**

1/4" = 1'-0"

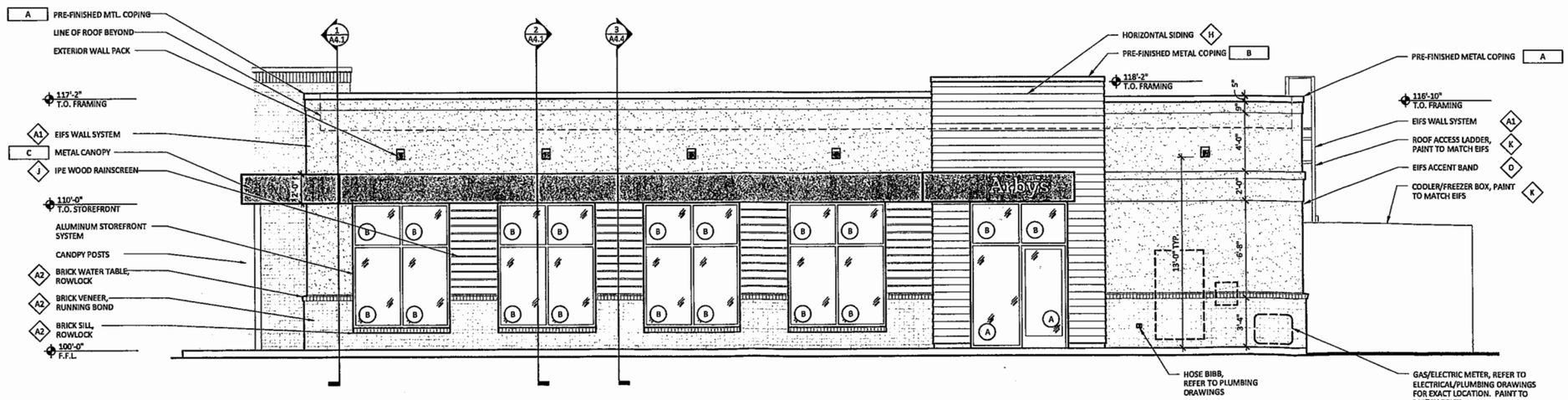

2 A2.1 **SIDE ELEVATION**

1/4" = 1'-0"

FINISH SCHEDULE

MARK	MANUFACTURER	DESCRIPTION	NOTES
GLASS TYPES			
A	---	1" CLEAR TEMPERED INSULATED GLASS UNIT	LOW "E"
B	---	1" CLEAR INSULATED GLASS UNIT	LOW "E"
C	---	1/4" CLEAR TEMPERED SAFETY GLASS	IN DRIVE THRU WINDOW UNIT
FINISHES			
A1	DRYVIT	#310 CHINA WHITE SANDBLAST TEXTURE	EIFS WALL SYSTEM
A2	COUNTY MATERIALS	HERITAGE COLLECTION WHITE NF	SMOOTH
B	NOT USED	---	---
C	NOT USED	---	---
D	SHERWIN WILLIAMS	PRIMER: LOXON ACRYLIC MASONRY PRIMER, A-24-300 FINISH: DTM ACRYLIC GLOSS, B66R38	TINT PRIMER TO SW P2 USE AT LEAST (2) TWO COATS OF FINISH
E	NOT USED	---	---
F	SHERWIN WILLIAMS	#SW 7024 FUNCTIONAL GRAY	SATIN FINISH
G	NOT USED	---	---
H	JAMES HARDIE	ARTISAN LAP SIDING - SMOOTH IRON GRAY	5/8" THICK 7 1/4" WIDTH (6" EXPOSURE)
J	IPE WOOD RAINSCREEN	---	PROVIDE UV SEALER
K	SHERWIN WILLIAMS	#SW 2123 WHITE	SATIN FINISH
METALS			
A	EXCEPTIONAL METALS/ DURO-LAST	TWO-PIECE SNAP-ON METAL COPING REGAL WHITE/ DURO-LAST #SR70/TE87	FOR USE WITH DURO-LAST ROOFING SYSTEM DETAIL FA3110
B	EXCEPTIONAL METALS/ DURO-LAST	TWO-PIECE SNAP-ON METAL COPING DARK BRONZE/ DURO-LAST #SR70/TE87	FOR USE WITH DURO-LAST ROOFING SYSTEM DETAIL FA3110
C	PRE-FABRIACTED AWNING	PRIMER: BOND-PLEX WATERBASED ACRYLIC COATING, B71-200 FINISH: DTM ACRYLIC GLASS, B66R38	TINT PRIMER TO SW P2 USE AT LEAST (2) TWO COATS OF FINISH

1. PAINT ALL EXPOSED METERS, SERVICE ENTRANCES, GAS PIPE, ROOF ACCESS LADDER, ETC. TO MATCH ADJACENT EXTERIOR WALL SURFACE.
2. PROVIDE TEMPORARY MASKING OF EXPOSED STAINLESS STEEL DURING ACID WASHING OF MASONRY.
3. PROVIDE SOLID MASONRY UNITS AT THE ENDS OF JAMBS , SILLS, ETC.
4. TO HELP PREVENT EFFLORESCENCE ALL MASONRY UNITS ARE TO BE MANUFACTURED WITH INTEGRAL WATER REPELLANT. WATER REPELLENT ADMIXTURE IS TO BE MIXED IN AND PRE-WASHED SAND IS TO BE USED IN ALL MORTAR MIXES.
5. MAKE SURE THAT WALL WEEPS AND FLASHING ARE INSTALLED CORRECTLY. DO NOT BLOCK WEEPS. REFER TO SPECIFICATIONS ON SHEET SP-2.

r e d
architecture + planning
855 grandview ave.
suite 295
columbus, ohio 43215
tel: 614.487.8770
fax: 614.487.8777

PROPRIETARY INFORMATION NOTICE:
THESE PROTOTYPICAL DOCUMENTS MAY REQUIRE REVISIONS TO CONFORM TO LOCAL, STATE, AND FEDERAL CODES, ORDINANCES OR OTHER CONDITIONS. THE DESIGN CONCEPTS EMBODIED IN THESE DOCUMENTS ARE SPECIFICALLY FOR THIS PROJECT. INFORMATION CONTAINED HEREIN REMAINS THE SOLE PROPERTY OF ARBY'S RESTAURANT GROUP, IS CONFIDENTIAL AND PROPRIETARY AND IS NOT TO BE COPIED, REPRODUCED, DISCLOSED OR OTHERWISE TRANSFERRED TO OTHER PARTIES IN ANY FORM WHATSOEVER WITHOUT THE EXPRESS WRITTEN CONSENT OF ARBY'S RESTAURANT GROUP.

Arby's™

Copyright© 2014 by Arby's Restaurant Group

NOT FOR CONSTRUCTION

ARBY'S RESTAURANT GROUP
INSPIRE PROTOTYPE - 2014 VERSION
PROJECT ADDRESS
CITY, STATE 12345

PROJECT NUMBER: ARG064

ISSUE	DATE
PROTOTYPE	JUNE 25, 2014

EXTERIOR ELEVATIONS

SHEET: A2.1

6/24/2014 3:52 PM

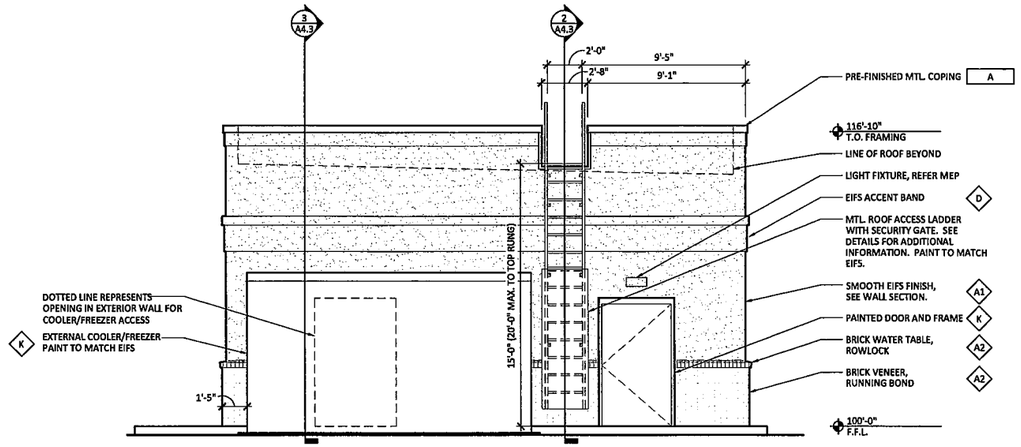

1 A2.2 **REAR ELEVATION**

1/4" = 1'-0"

FINISH SCHEDULE

MARK	MANUFACTURER	DESCRIPTION	NOTES
GLASS TYPES			
A	---	1" CLEAR TEMPERED INSULATED GLASS UNIT	LOW "E"
B	---	1" CLEAR INSULATED GLASS UNIT	LOW "E"
C	---	1/4" CLEAR TEMPERED SAFETY GLASS	IN DRIVE THRU WINDOW UNIT
FINISHES			
A1	DRYVIT	#310 CHINA WHITE SANDBLAST TEXTURE	EIFS WALL SYSTEM
A2	COUNTY MATERIALS	HERITAGE COLLECTION WHITE NF	SMOOTH
B	NOT USED	---	---
C	NOT USED	---	---
D	SHERWIN WILLIAMS	PRIMER: LOXON ACRYLIC MASONRY PRIMER, A-24-300 FINISH: DTM ACRYLIC GLOSS, B66R38	TINT PRIMER TO SW P2 USE AT LEAST (2) TWO COATS OF FINISH
E	NOT USED	---	---
F	SHERWIN WILLIAMS	#SW 7024 FUNCTIONAL GRAY	SATIN FINISH
G	NOT USED	---	---
H	JAMES HARDIE	ARTISAN LAP SIDING - SMOOTH IRON GRAY	5/8" THICK 7 1/4" WIDTH (6" EXPOSURE)
J	IPE WOOD RAINSCREEN	---	PROVIDE UV SEALER
K	SHERWIN WILLIAMS	#SW 2123 WHITE	SATIN FINISH
METALS			
A	EXCEPTIONAL METALS/ DURO-LAST	TWO-PIECE SNAP-ON METAL COPING REGAL WHITE/ DURO-LAST #5R70/TE87	FOR USE WITH DURO-LAST ROOFING SYSTEM DETAIL FA3110
B	EXCEPTIONAL METALS/ DURO-LAST	TWO-PIECE SNAP-ON METAL COPING DARK BRONZE/ OURO-LAST #5R70/TE87	FOR USE WITH DURO-LAST ROOFING SYSTEM DETAIL FA3110
C	PRE-FABRICATED AWNING	PRIMER: BOND-PLEX WATERBASED ACRYLIC COATING, B71-200 FINISH: DTM ACRYLIC GLASS, B66R38	TINT PRIMER TO SW P2 USE AT LEAST (2) TWO COATS OF FINISH

1. PAINT ALL EXPOSED METERS, SERVICE ENTRANCES, GAS PIPE, ROOF ACCESS LADDER, ETC. TO MATCH ADJACENT EXTERIOR WALL SURFACE.
2. PROVIDE TEMPORARY MASKING OF EXPOSED STAINLESS STEEL DURING ACID WASHING OF MASONRY.
3. PROVIDE SOLID MASONRY UNITS AT THE ENDS OF JAMBS , SILLS, ETC.
4. TO HELP PREVENT EFFLORESCENCE ALL MASONRY UNITS ARE TO BE MANUFACTURED WITH INTEGRAL WATER REPELLANT. WATER REPELLENT ADMIXTURE IS TO BE MIXED IN AND PRE-WASHED SAND IS TO BE USED IN ALL MORTAR MIXES.
5. MAKE SURE THAT WALL WEEPS AND FLASHING ARE INSTALLED CORRECTLY. DO NOT BLOCK WEEPS. REFER TO SPECIFICATIONS ON SHEET SP-2.

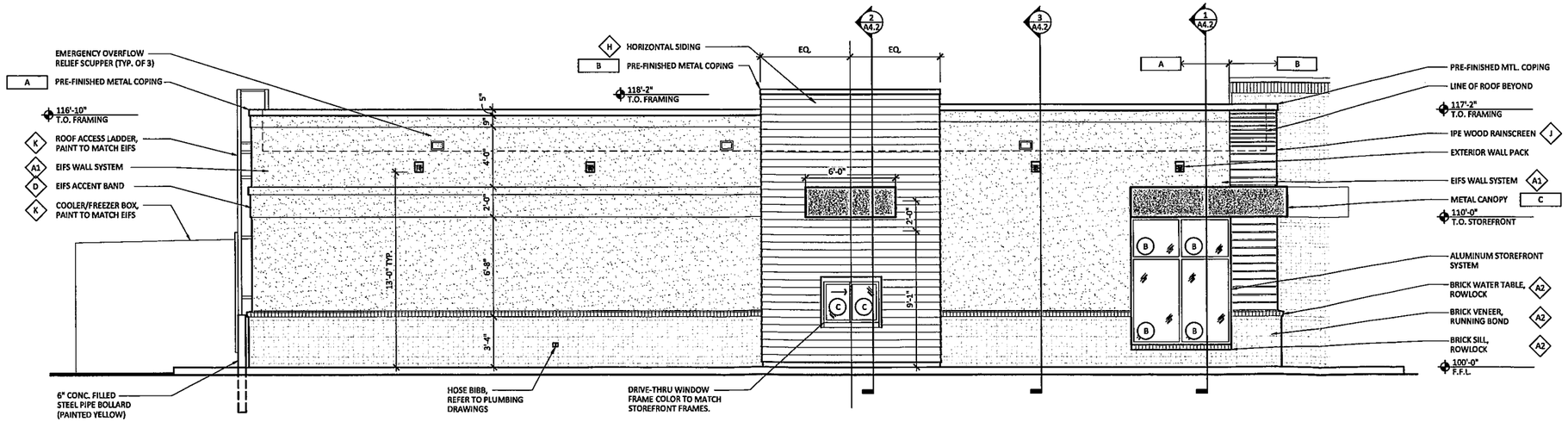

2 A2.2 **SIDE ELEVATION**

1/4" = 1'-0"

red
architecture + planning
855 grandview ave.
suite 295
columbus, ohio 43215
tel: 614.487.8770
fax: 614.487.8777

PROPRIETARY INFORMATION NOTICE:

THESE PROTOTYPICAL DOCUMENTS MAY REQUIRE REVISIONS TO CONFORM TO LOCAL, STATE, AND FEDERAL CODES, ORDINANCES OR OTHER CONDITIONS. THE DESIGN CONCEPTS EMBODIED IN THESE DOCUMENTS ARE SPECIFICALLY FOR THIS PROJECT. INFORMATION CONTAINED HEREIN REMAINS THE SOLE PROPERTY OF ARBY'S RESTAURANT GROUP, IS CONFIDENTIAL AND PROPRIETARY AND IS NOT TO BE COPIED, REPRODUCED, DISCLOSED OR OTHERWISE TRANSFERED TO OTHER PARTIES IN ANY FORM WHATSOEVER WITHOUT THE EXPRESS WRITTEN CONSENT OF ARBY'S RESTAURANT GROUP.

Arby's

Copyright© 2014 by Arby's Restaurant Group

NOT FOR CONSTRUCTION

ARBY'S RESTAURANT GROUP
INSPIRE PROTOTYPE - 2014 VERSION
PROJECT ADDRESS
CITY, STATE 12345

PROJECT NUMBER: ARG064

ISSUE	DATE
PROTOTYPE	JUNE 25, 2014

EXTERIOR ELEVATIONS

SHEET: A2.2

6/24/2014 3:52 PM

ARBY'S®

316-320 WEST MAIN STREET (NYS ROUTE 5)
CITY OF BATAVIA, GENESEE COUNTY
NEW YORK

UTILITY COMPANIES

WATER

CITY OF BATAVIA DEPARTMENT OF PUBLIC WORKS
1 BATAVIA CITY CENTRE
BATAVIA, NEW YORK 14020
ATTN: Matt Worth, Superintendent of Water & Wastewater
(585) 345-6315

SANITARY SEWER

CITY OF BATAVIA DEPARTMENT OF PUBLIC WORKS
1 BATAVIA CITY CENTRE
BATAVIA, NEW YORK 14020
ATTN: Matt Worth, Superintendent of Water & Wastewater
(585) 345-6315

STORM SEWER

NEW YORK STATE DEPARTMENT OF TRANSPORTATION
5441 EAST MAIN STREET
BATAVIA, NEW YORK 14020
ATTN: Dan Stahely, Assistant Resident Engineer
(585) 343-1326

GAS

NATIONAL FUEL
9600 WEHRLE DRIVE
CLARENCE, NY 14031
ATTN: Anne Donovan
(716) 759-5155

ELECTRIC

NATIONAL FUEL
9600 WEHRLE DRIVE
CLARENCE, NY 14031
ATTN: Sally Dorigo
(585) 344-5897

TELEPHONE

VERIZON
65 FRANKLIN STREET, 6TH FLOOR
BUFFALO, NEW YORK 14202
ATTN: Thomas Swierski, Engineer
(716) 840-8657
(716) 842-0405 FAX

CABLE

TIME WARNER
6601 KIRKVILLE ROAD
EAST SYRACUSE, NEW YORK 13057
ATTN: Bob Scott, Account Executive
(315) 883-5111

APPROVAL AGENCIES

CITY OF BATAVIA BUREAU OF INSPECTION
1 BATAVIA CITY CENTRE
BATAVIA, NEW YORK 14020
ATTN: Doug Randall, City Inspector
(585) 345-6330
(585) 345-81812 FAX

GENESEE COUNTY DEPARTMENT OF PUBLIC HEALTH
14012 ROUTE 31 WEST
ALBION, NEW YORK 14411
ATTN: David Whitcroft, Senior Public Health Sanitorian
(585) 589-3278
(585) 589-2873 FAX

NEW YORK STATE DEPARTMENT OF TRANSPORTATION – REGION 4
5441 EAST MAIN STREET ROAD
BATAVIA, NEW YORK 14020
ATTN: Dan Stahely, Assistant Resident Engineer
(585) 343-1326

DESIGN CONSULTANTS

CIVIL

T.Y. LIN INTERNATIONAL ENGINEERING, ARCHITECTURE & LAND SURVEYING
255 EAST AVENUE
ROCHESTER, NEW YORK 14604
ATTN: Randy Bebout, Project Manager
(585) 512-2000
(585) 697-3449 FAX

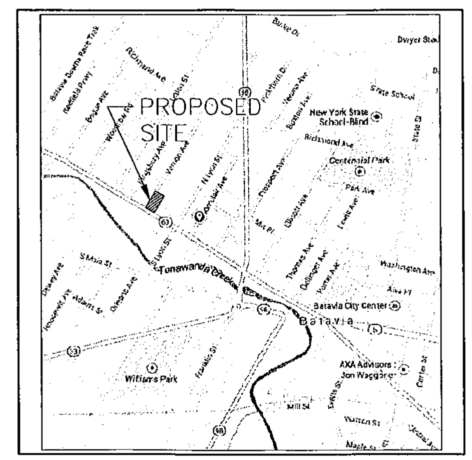

LOCATION MAP
NOT TO SCALE

DWG. NO.	DESCRIPTION	SHEET NO.
T-1	TITLE SHEET	1 of 1
C-1	SITE PLAN	2 of 2
C-2	UTILITY PLAN	3 of 3
C-3	LANDSCAPE PLAN	4 of 4
C-4	SITE LIGHTING PLAN	5 of 5
CD-1	CONSTRUCTION DETAILS – 1	6 of 6
CD-2	CONSTRUCTION DETAILS – 2	7 of 7
CD-3	CONSTRUCTION DETAILS – 3	8 of 8

DEVELOPER

VIELE CONSTRUCTION COMPANY
61 SWAN STREET, #3
BATAVIA, NY 14020

ARBY'S.
316-320 WEST MAIN STREET, BATAVIA (NYS ROUTE 5),
CITY OF BATAVIA, GENESEE COUNTY, NEW YORK

T·Y·LIN INTERNATIONAL
255 EAST AVENUE
ROCHESTER, NY 14604
(585) 512-2000

PROJECT NO.: 43.XXXX.00	PROJ. MGR. RLB
DATE: 4/30/15	DRWN. BY: DMD
SCALE: NO SCALE	CHKD. BY: RLB
DRAWING NO: T-1	
SHEET NO. 1 of 8	

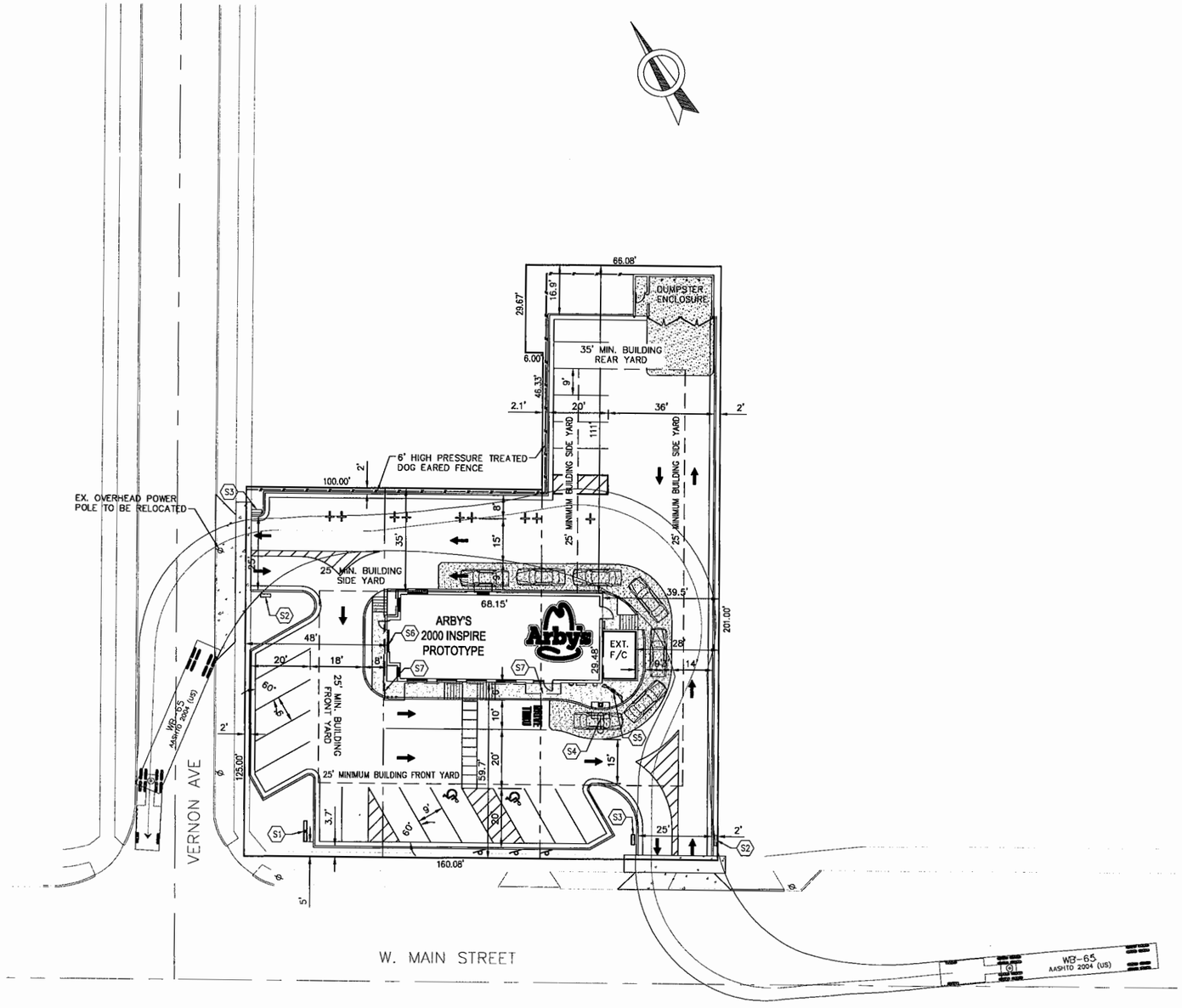

SITE DATA		
TAX ACCOUNT NUMBERS: 84.006-3-43, 84.006-3-44, 84.006-3-36		
PROPOSED LEASE AREA: 0.568 ACRES (24,754 SQ. FT.)		
CURRENT ZONING: C-2 (GENERAL COMMERCIAL DISTRICT)		
ZONING REQUIREMENTS	REQUIRED	PROPOSED
MINIMUM LOT AREA	15,000 SQ. FT.	24,754 SQ. FT.
MINIMUM LOT WIDTH	125 FT.	125 FT.
MAX. BUILDING/LOT COVERAGE	20% (6,815 SQ. FT.)	8.5% (2,100 SQ. FT.)
MAX. BUILDING HEIGHT	18 FT.	19.33 FT.
BUILDING SETBACKS		
FRONT	25 FT.	48 FT.
SIDE	25 FT.	28 FT.
REAR	35 FT.	111 FT.
PARKING SETBACKS		
FRONT	10 FT.	2 FT.
SIDE	10 FT.	2 FT.
REAR	10 FT.	16.9 FT.
DRIVE AISLES		
ONE-WAY	20 FT.	14 FT.
TWO-WAY	24 FT.	25 FT.
MINIMUM DRIVEWAY SETBACK FROM SIDE PROPERTY LINE	20 FT.	2 FT.
PARKING STALL SIZE		
60° PARKING	8'x19'	9'x20'
90° PARKING	8'x19'	9'x20'
PARKING		
RESTAURANT: MIN. PARKING SPACES RESTAURANT, W/DRIVE THRU: 4 SPACES PER 100 S.F. OF NET FLOOR AREA		
TOTAL SPACES	39	24

GENERAL NOTES

1. COORDINATE START-UP AND ALL CONSTRUCTION ACTIVITIES WITH OWNER.
2. CONSTRUCTION METHODS AND OWNER'S MATERIALS NOT SPECIFIED IN THESE PLANS ARE TO MEET OR EXCEED THE OWNER'S STANDARD SPECIFICATIONS.
3. THE CONTRACTOR SHALL CONDUCT THE WORK IN A MANNER THAT WILL INSURE, AS FAR AS PRACTICABLE, THE LEAST OBSTRUCTION TO TRAFFIC AND SHALL PROVIDE FOR THE CONVENIENCE AND SAFETY OF THE GENERAL PUBLIC ALONG AND ADJACENT TO ROADS IN THE CONSTRUCTION AREA, IN AN ADEQUATE AND SATISFACTORY MANNER.
4. THE CONTRACTOR SHALL LOCATE, MARK, SAFEGUARD AND PRESERVE ALL SURVEY CONTROL MONUMENTS AND R.O.W. MONUMENTS IN THE AREAS OF CONSTRUCTION.
5. THE CONTRACTOR IS RESPONSIBLE TO ENSURE THAT ALL REQUIRED INSPECTIONS AND/OR CERTIFICATIONS REQUIRED BY CODES AND/OR THE JURISDICTIONAL AUTHORITY ARE COMPLETED.
6. THE CONTRACTOR SHALL COORDINATE WITH ALL UTILITY COMPANIES TO DETERMINE EXACT POINT OF SERVICE CONNECTION AT EXISTING UTILITY. REFER TO THE BUILDING ELECTRICAL AND PLUMBING DRAWINGS FOR UTILITY SERVICE ENTRANCE LOCATIONS, SIZES, AND CIRCUITING.
7. ALL ELEVATIONS SHOWN ARE IN REFERENCE TO THE BENCHMARK AND MUST BE VERIFIED BY THE GENERAL CONTRACTOR AT GROUND BREAK.
8. FINISH WALK AND CURB ELEVATIONS SHALL BE 6" ABOVE FINISH PAVEMENT, UNLESS OTHERWISE NOTED.
9. ALL ON-SITE CONCRETE WALKS TO BE 4" THICK AND BROOM FINISHED.

BUSINESS SIGN DATA TABLE						
SIGN ID	SIGN QUANTITY	SIGN TYPE	SIGN MODEL	NO. OF SIDES	SIGN AREA PER SIDE (SQ. FT.)	TOTAL AREA (SQ. FT.)
S1	1	POLE SIGN "ARBY'S"	INTERNALLY ILLUMINATED	2	45.5 SQUARED	45.5
S2	2	DIRECTIONAL (4' POLE) "ENTER"	INTERNALLY ILLUMINATED	2	3.1 SQUARED	3.1
S3	2	DIRECTIONAL (4' POLE) "EXIT"	INTERNALLY ILLUMINATED	2	3.1 SQUARED	3.1
S4	1	DRIVE-THRU CANOPY	CP-2100	1	N/A	N/A
S5	1	POLE "MENU BOARD"	INTERNALLY ILLUMINATED	1	45.0 SQUARED	45.0
S6	1	WALL LOGO "ARBY'S"	INTERNALLY ILLUMINATED	1	17.67 SQUARED	17.67
S7	2	CANOPY "ARBY'S"	INTERNALLY ILLUMINATED	1	6.88 SQUARED	13.76
					TOTAL BLDG. SIGNAGE	31.43

20 10 0 20 40 60
SCALE IN FEET

Dig Safely. New York
800-962-7962
www.digsafelynewyork.org
- ☐ Call Before You Dig
- ☐ Wait The Required Time
- ☐ Confirm Utility Response
- ☐ Respect the Marks
- ☐ Dig With Care

ARBY'S RESTAURANT GROUP, INC.
1155 PERIMETER CENTER WEST
ATLANTA, GA 30338

TYLIN INTERNATIONAL
255 EAST AVENUE
ROCHESTER, NY 14604
(585) 512-2000

NO.	DATE:	DESCRIPTION
1		REVISIONS
2		
3		
4		
5		
6		

DATE

DRAWING TITLE: SITE PLAN
PROJECT NAME: ARBY'S RESTAURANT
316-320 WEST MAIN STREET, CITY OF BATAVIA, GENESEE COUNTY, NY
CLIENT: VIELE CONSTRUCTION COMPANY
61 SWAN STREET, #3
BATAVIA, NY 14020

PROJECT NO.:	PROJ. MGR.:
43.XXXX.00	RLB
DATE: 4/30/15	DRWN. BY: DMD
SCALE: 1"=20'	CHKD. BY: RLB
DRAWING NO: C-1	
2 OF 8	

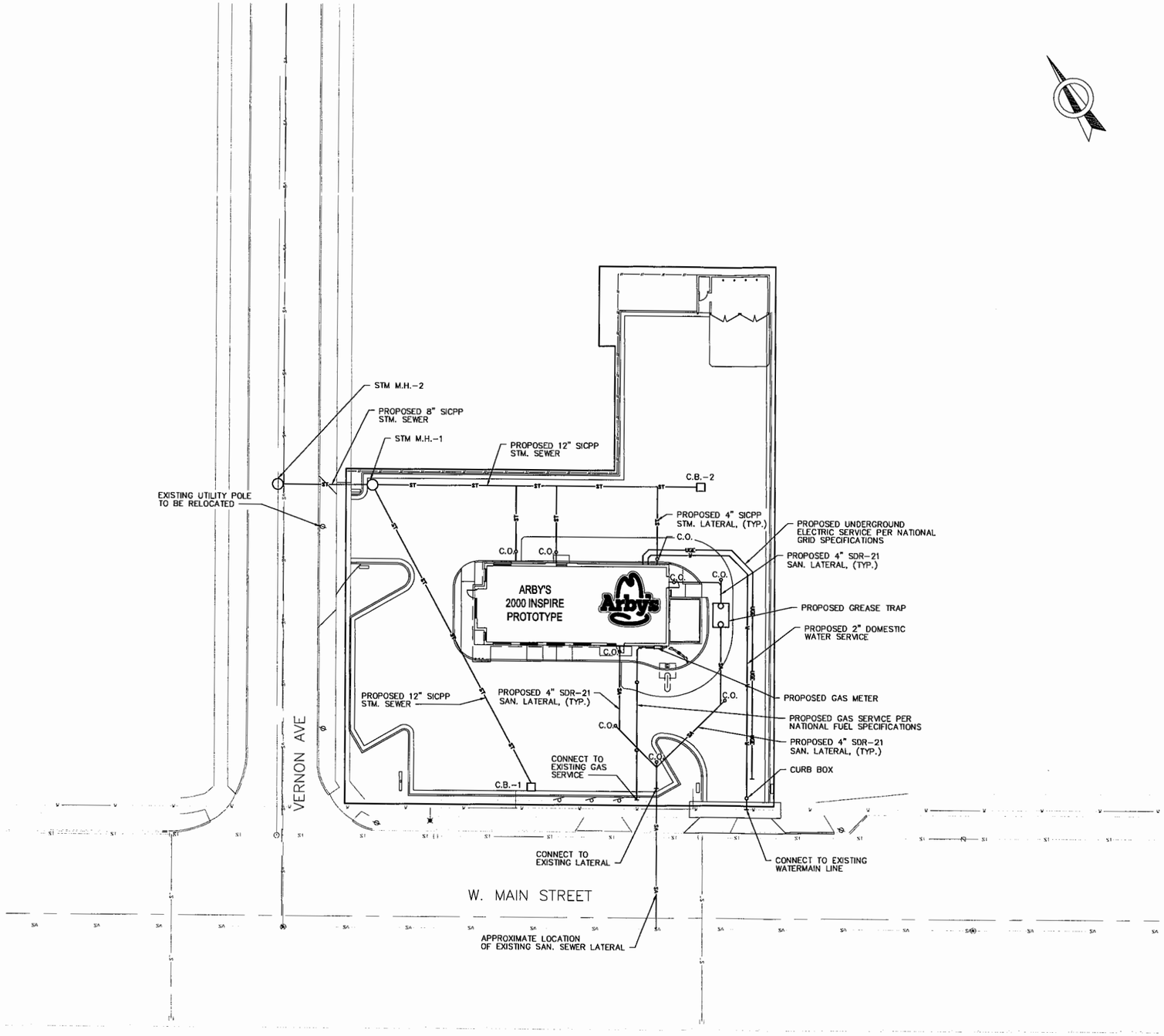

UTILITY NOTES

1. ALL ELECTRIC, TELEPHONE AND GAS SERVICE LINES TO BE CONSTRUCTED TO THE APPROPRIATE UTILITY COMPANY SPECIFICATIONS.
2. THE CONTRACTOR IS SPECIFICALLY CAUTIONED THAT THE LOCATIONS AND/OR ELEVATIONS OF EXISTING UTILITIES AS SHOWN ON THESE PLANS ARE BASED ON RECORDS OF THE VARIOUS UTILITY COMPANIES AND, WHERE POSSIBLE, MEASUREMENTS TAKEN IN THE FIELD. THE INFORMATION IS NOT TO BE RELIED ON AS BEING EXACT OR COMPLETE. THE CONTRACTOR MUST CALL THE APPROPRIATE UTILITY COMPANY AT LEAST 72 HOURS BEFORE ANY EXCAVATION TO REQUEST EXACT FIELD LOCATION OF UTILITIES. IT SHALL BE THE RESPONSIBILITY OF THE CONTRACTOR TO RELOCATE ALL EXISTING UTILITIES WHICH CONFLICT WITH THE PROPOSED IMPROVEMENTS SHOWN ON THE PLANS.
3. THE CONTRACTOR IS RESPONSIBLE TO ENSURE THAT ALL REQUIRED INSPECTIONS AND/OR CERTIFICATIONS REQUIRED BY CODES AND/OR UTILITY SERVICE COMPANIES ARE COMPLETED PRIOR TO ANNOUNCED BUILDING POSSESSION AND THE FINAL CONNECTION OF SERVICES.
4. PRIOR TO EXCAVATING NEAR GAS OR ELECTRIC LINES, THE CONTRACTOR SHALL NOTIFY THE APPROPRIATE UTILITY COMPANY.
5. CONNECT ALL ROOF DOWNSPOUTS TO STORM SEWER SYSTEM.
6. ALL MANHOLES ARE TO BE 4 FEET IN DIAMETER UNLESS OTHERWISE SPECIFIED.

LEGEND

UGE	PROPOSED UNDERGROUND ELECTRIC
W	PROPOSED 2" DOMESTIC WATER
GAS	PROPOSED GAS SERVICE
SA	PROPOSED SANITARY SEWER PIPE
ST	PROPOSED STORM SEWER PIPE

20 10 0 20 40 60
SCALE IN FEET

Dig Safely. New York
800-962-7962
www.digsafelynewyork.org
- ☐ Call Before You Dig
- ☐ Wait The Required Time
- ☐ Confirm Utility Response
- ☐ Respect the Marks
- ☐ Dig With Care

Arby's
ARBY'S RESTAURANT GROUP, INC.
1155 PERIMETER CENTER WEST
ATLANTA, GA 30338

TYLIN INTERNATIONAL
255 EAST AVENUE
ROCHESTER, NY 14604
(585) 512-2000

NO.	DATE:	DESCRIPTION
1		REVISIONS
2		
3		
4		
5		
6		

DATE

DRAWING TITLE: UTILITY PLAN
PROJECT NAME: ARBY'S RESTAURANT
316-320 WEST MAIN STREET, CITY OF BATAVIA, GENESEE COUNTY, NY
CLIENT: VIELE CONSTRUCTION COMPANY
61 SWAN STREET, #3
BATAVIA, NY 14020

PROJECT NO.: 43.XXXX.00	PROJ. MGR.: RLB
DATE: 4/30/15	DRWN. BY: DMD
SCALE: 1"=20'	CHKD. BY: RLB

DRAWING NO: C-2
3 OF 8

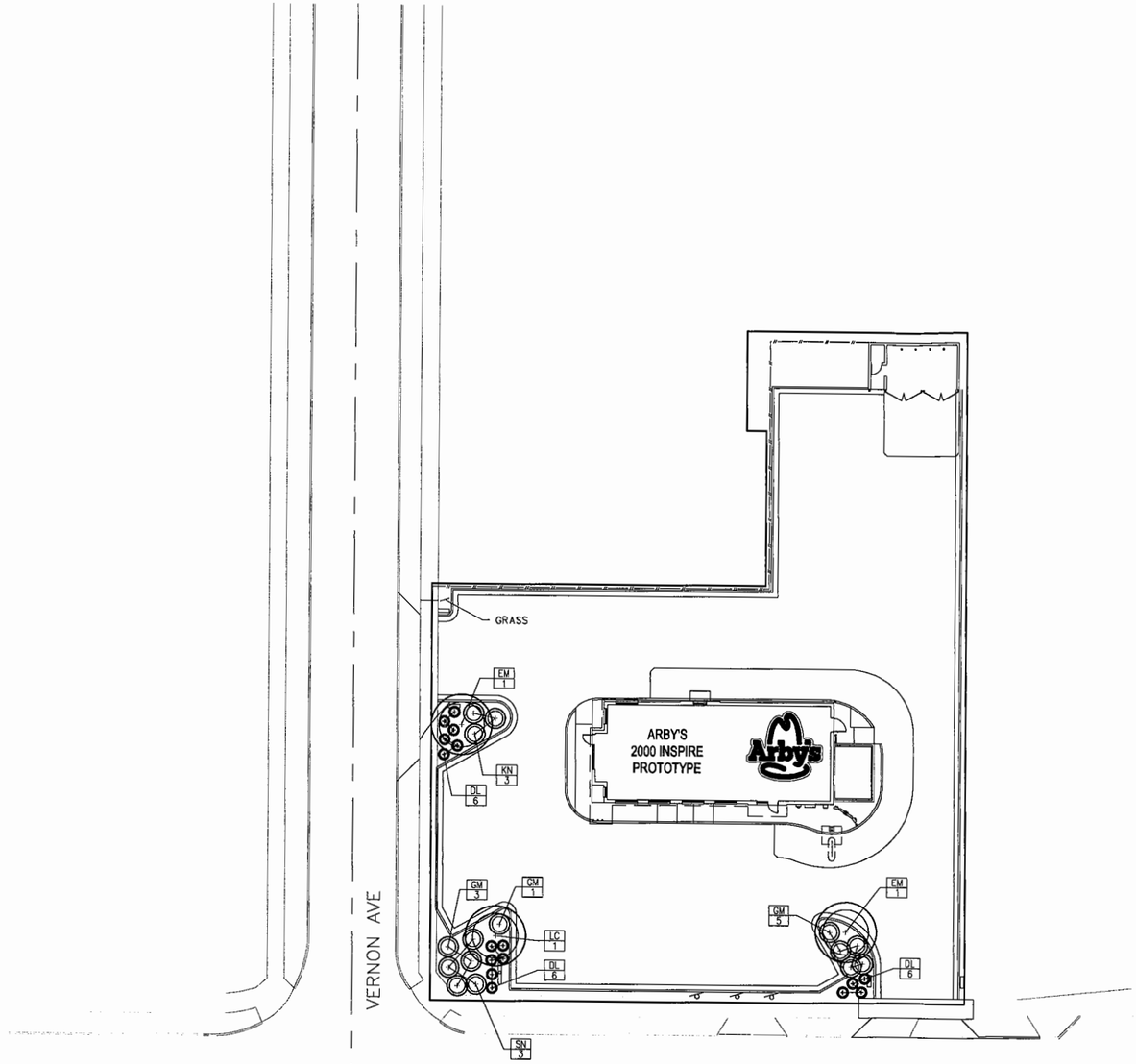

PLANT LIST			
KEY	COMMON NAME	QUANT.	SIZE
GM	Goldmound Spirea	9	2 Gallon
DL	Daylily Stella Doro	16	1 Gallon
KN	Knockout Rose	3	3 Gallon
EM	Emerald Maple	2	2 1/2" CAL.
LC	Loucost	1	2 1/2" CAL.
SN	Neon Flash Spirea	3	18" SPR.

PLANTING NOTES

1. ALL BEDS MULCHED WITH BLACK HARDWOOD MULCH.
2. STEEL EDGE INSTALLED IN AREAS ADJACENT TO TURF.
3. ALL GRASS AREAS TO BE INSTALLED WITH SOD.

SEED SCHEDULE

4-5 LBS/1,000 S.F.

65% FINE FESCUS (RELIANT OR BILJART)
20% PERENNIAL RYEGRASS (ALL-STAR OR DSAHER II)
15% KENTUCKY BLUEGRASS BLEND (USE AT LEAST 3 CULTIVARS)

LEGEND

PROPOSED TREE\SHRUB

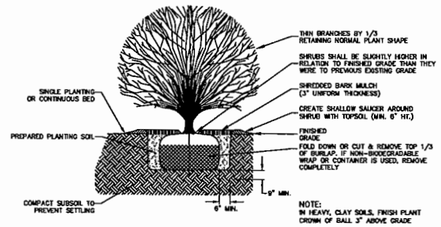

SHRUB PLANTINGS
NOT TO SCALE

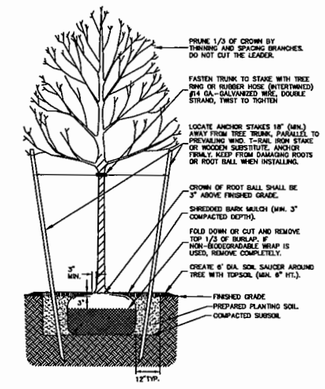

DECIDUOUS PLANTING
NOT TO SCALE

20 10 0 20 40 60
SCALE IN FEET

Dig Safely. New York
800-962-7962
www.digsafelynewyork.org
- ☐ Call Before You Dig
- ☐ Wait The Required Time
- ☐ Confirm Utility Response
- ☐ Respect the Marks
- ☐ Dig With Care

ARBY'S RESTAURANT GROUP, INC.
1155 PERIMETER CENTER WEST
ATLANTA, GA 30338

TYLININTERNATIONAL
255 EAST AVENUE
ROCHESTER, NY 14604
(585) 512-2000

NO.	DATE:	DESCRIPTION
1		REVISIONS
2		
3		
4		
5		
6		

DATE

DRAWING TITLE: LANDSCAPE PLAN
PROJECT NAME: ARBY'S RESTAURANT
316-320 WEST MAIN STREET, CITY OF BATAVIA, GENESEE COUNTY, NY
CLIENT: VIELE CONSTRUCTION COMPANY
61 SWAN STREET, #3
BATAVIA, NY 14020

PROJECT NO.: 43.XXXX.00	PROJ. MGR: RLB
DATE: 4/30/15	DRWN. BY: DMD
SCALE: 1"=20'	CHKD. BY: RLB

DRAWING NO: C-3
4 OF 8

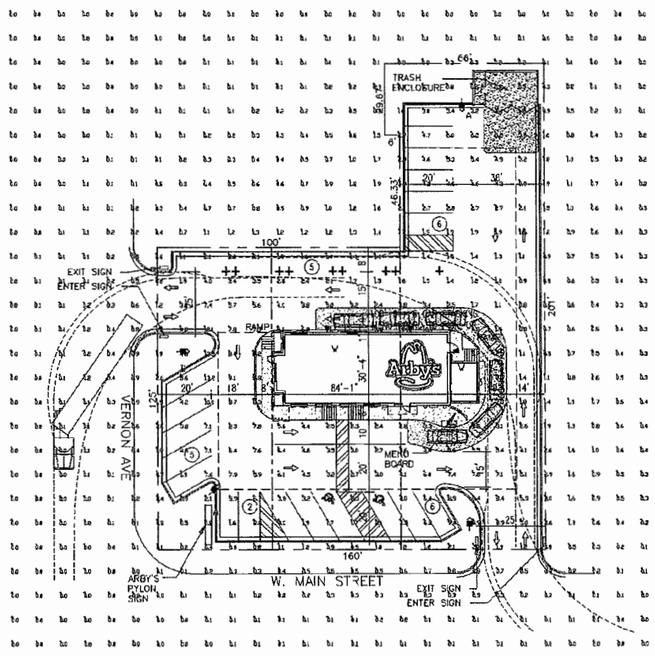

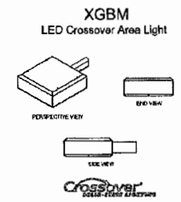

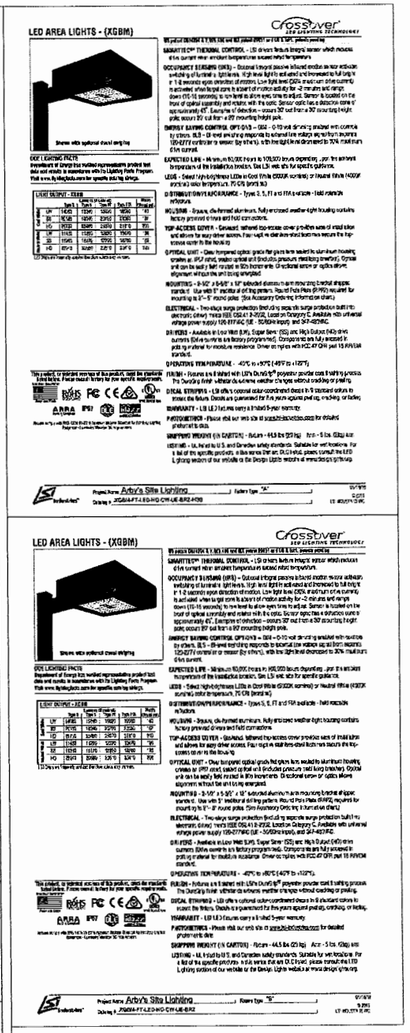

Calculation Summary								
Label	CalcType	Units	Avg	Max	Min	Avg/Min	Max/Min
CalcPts	Illuminance	Fc	1.40	15.7	0.0	N.A.	N.A.
PARKING/DRIVE SUMMARY	Illuminance	Fc	4.36	15.7	0.8	5.45	19.63

Luminaire Schedule								
Symbol	Qty	Label	Arrangement	Description	LLF	Lumens/Lamp	Arr. Lum. Lumens	Arr. Watts
	3	V	SINGLE	PVN-S-LED-HO-CV-UC	1.000	N.A.	5184	55.6
	2	B	SINGLE	XGBM-FT-LED-HO-CV SINGLE ON 24' POLE + 2' BASE	1.000	N.A.	29070	300.8
	2	A	SINGLE	XGBM-FT-LED-HO-CV-HSS SINGLE ON 24' POLE + 2' BASE	1.000	N.A.	21164	287.6

Based on the information provided, all dimensions and luminaire locations shown represent recommended positions. The engineer and/or architect must determine the applicability of the layout to existing or future field conditions.

This lighting plan represents illumination levels calculated from laboratory data taken under controlled conditions in accordance with the Illuminating Engineering Society (IES) approved methods. Actual performance of any manufacturer's luminaires may vary due to changes in electrical voltage, tolerance in lamps/LED's and other variable field conditions. Calculations do not include obstructions such as buildings, curbs, landscaping, or any other architectural elements unless noted.

DRAWING SCALED FROM A GOOGLE MAP OR PDF SCANNED IMAGE. ALL DIMENSIONS ARE APPROXIMATE.

Total Project Watts
Total Watts = 13436

LIGHTING PROPOSAL LJ-127285

ARBY'S
WEST MAIN
BATAVIA, OH

SCALE: 1"=20'

Arby's RESTAURANT GROUP, INC.
1155 PERIMETER CENTER WEST
ATLANTA, GA 30338

NO.	DATE:	DESCRIPTION
6		
5		
4		
3		
2		
1		

REVISIONS

DATE

T·Y·LIN INTERNATIONAL
255 EAST AVENUE
ROCHESTER, NY 14604
(585) 512-2000

DRAWING TITLE: SITE LIGHTING PLAN

PROJECT NAME: ARBY'S RESTAURANT
316-320 WEST MAIN STREET, CITY OF BATAVIA, GENESEE COUNTY, NY

CLIENT: VIELE CONSTRUCTION COMPANY
61 SWAN STREET, #3
BATAVIA, NY 14020

PROJECT NO.: 43.XXXX.00	PROJ. MGR.: RLB
DATE: 4/30/15	DRWN. BY: DMD
SCALE: NTS	CHKD. BY: RLB
DRAWING NO: C-4 5 OF 7	

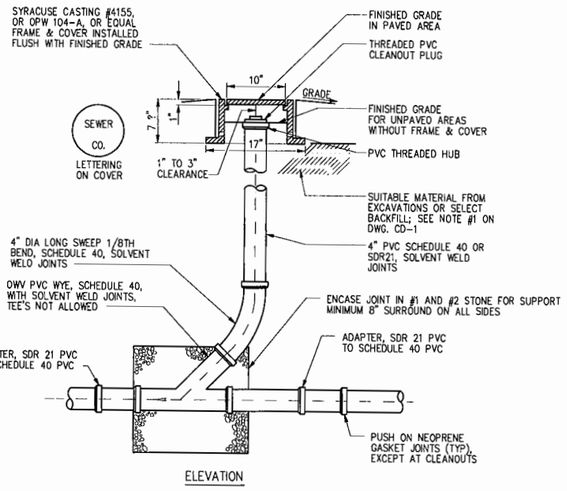

ELEVATION

NOTE:
WYE SHALL BE ENCASED IN #1 AND #2 CRUSHED STONE, MINIMUM 8" SURROUND ON ALL SIDES, FOR STRUCTURAL SUPPORT.

STORM/SANITARY LATERAL CLEANOUT DETAIL
NOT TO SCALE

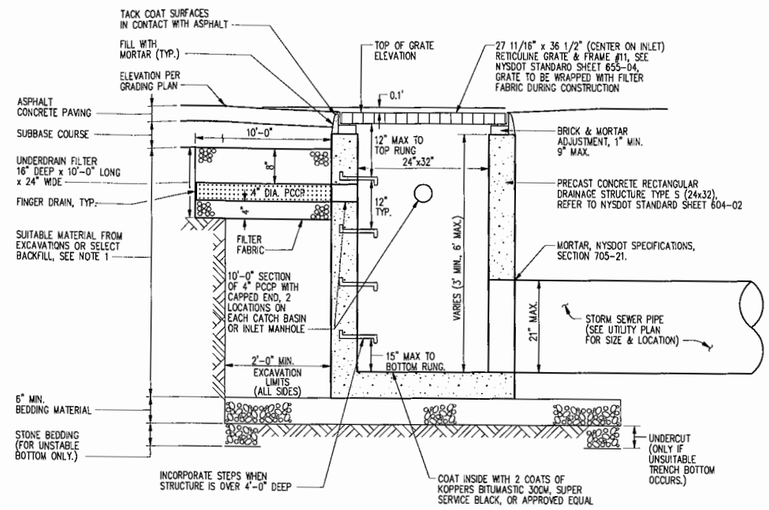

TYPICAL CATCH BASIN (24"x32" RETICULINE)
NOT TO SCALE

STORM AND SANITARY SEWER NOTES

1. MATERIALS
   a. SELECT BACKFILL SHALL CONFORM TO THE REQUIREMENTS OF NYSDOT SPECIFICATIONS, SECTION 203, ITEM 203.07.
   b. BEDDING MATERIAL SHALL CONFORM TO THE REQUIREMENTS OF NYSDOT SPECIFICATIONS, SECTION 203, ITEM 203.07, EXCEPT THAT MAXIMUM PARTICLE SIZE SHALL BE 2".
   c. SUITABLE MATERIAL FROM THE EXCAVATIONS SHALL BE ANY MINERAL (INORGANIC) SOIL FREE OF MUCK, PEAT, INORGANIC SILT, TOPSOIL AND SOD AND SHALL HAVE A MAXIMUM PARTICLE SIZE OF 4".
   d. BACKFILL ABOVE THE BEDDING MATERIAL UNDER SHALL BE WITH SELECT BACKFILL.
   e. BACKFILL ABOVE THE BEDDING MATERIAL UNDER LAWN AREAS MAY BE WITH SUITABLE MATERIAL FROM THE EXCAVATIONS.
   f. BACKFILL ABOVE THE BEDDING MATERIAL UNDER PRIVATE PAVED AREAS MAY BE WITH SUITABLE MATERIAL FROM THE EXCAVATIONS, AS LONG AS COMPACTION REQUIREMENTS ARE MET. IF COMPACTION REQUIREMENTS ARE NOT MET WITH BACKFILL MATERIAL FROM THE EXCAVATIONS, SELECT BACKFILL SHALL BE PROVIDED.
   g. WHEN UNSTABLE TRENCH BOTTOM CONDITIONS ARE ENCOUNTERED, UNDERCUT AND BACKFILL WITH PRIMARY SIZE STONE, NYSDOT SPECIFICATIONS, SECTION 703-02, PRIMARY SIZE 1,2,3 OR 4. DEPTH OF UNDERCUT SHALL BE AS SPECIFIED BY OWNER'S REPRESENTATIVE.
2. COMPACTION REQUIRED FOR ALL BEDDING, SELECT FILL AND BACKFILL WORK. SEE NYSDOT SPECIFICATIONS FOR REQUIREMENTS.
3. FRAME AND COVER TO BE CAST IRON, ASTM A-48, CLASS 30B, HS-20 LOADING, LOCAL MUNICIPAL STANDARD FOR DEDICATED SEWERS. FOR PRIVATE SEWERS, USE SYRACUSE CASTING No. 1032 OR EQUIVALENT.
4. FLOOR DRAINS, IF CONSTRUCTED, SHALL BE CONNECTED TO THE SANITARY SEWER. FLOOR DRAINS DO NOT INCLUDE FOUNDATION OR FOOTER DRAINS INSTALLED TO INTERCEPT UNCONTAMINATED GROUNDWATER. ALL DISCHARGES TO THE SANITARY SEWER MUST COMPLY WITH THE EFFLUENT LIMITS OF THE LOCAL SEWER USE LAW. INFILTRATION AND EXFILTRATION TESTING SHALL BE PERFORMED WITH RATES LIMITED TO 100 GALLONS PER MILE PER INCH DIAMETER OF PIPE PER 24 HOURS FOR SANITARY SEWERS.
5. DEFLECTION TESTS SHALL BE PERFORMED ON ALL FLEXIBLE PIPE. THE TEST SHALL BE CONDUCTED AFTER THE FINAL BACKFILL HAS BEEN IN PLACE AT LEAST 30 DAYS. NO PIPE SHALL EXCEED A DEFLECTION OF 5% IF THE DEFLECTION TEST IS TO BE RUN USING A RIGID BALL OR MANDREL, IT SHALL HAVE A DIAMETER EQUAL TO 95% OF THE INSIDE DIAMETER OF THE PIPE. THE TEST SHALL BE PERFORMED WITHOUT MECHANICAL PULLING DEVICES.
6. CONTRACTOR SHALL BE RESPONSIBLE FOR VERIFYING PROPOSED RIM ELEVATIONS IN RELATION TO PROPOSED GRADE PRIOR TO INSTALLATION.
7. SANITARY SEWER PIPE AND FITTINGS SHALL BE PVC SDR-21 CONFORMING TO ASTM D-3034.

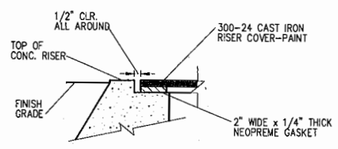

NOTES

1. POLYETHYLENE TANKS ACCEPTABLE IN NON-TRAFFIC AREAS UPON SPECIFIC APPROVAL OF THE DIRECTOR OF UTILITIES.
2. 3" MIN. BEDDING MATERIAL.
3. ALL SURFACE WATER MUST DRAIN AWAY FROM MANHOLE.
4. PIPE SHALL BE 6" MAX. OR PER LOCAL CODE.
5. CONCRETE MIN. COMPRESSIVE STRENGTH OF 3000 PSI AT 28 DAYS.
6. ALL WYES SHALL BE ONE-WAY CLEANOUT WYES EXCEPT AS NOTED.
7. GREASE INTERCEPTORS SHALL BE LOCATED OUTSIDE OF BUILDINGS IN A LOCATION ACCESSIBLE TO WASTE-HAULER PUMPER.
8. SLAB TO EXTEND 24" BEYOND ALL SIDES OF TANK (TRAFFIC AREAS).
9. ALL WASTE MUST ENTER THROUGH INLET FITTINGS ONLY.
10. TANK TO BE STENCILED ON UPPER LEFT HAND CORNER OF INLET END IN WHITE.
11. STAINLESS STEEL CLAMP & BOLTS 3'-0" O.C. MAX. (TYP.) MIN. 2 REQ'D.
12. WATERSTOP CONSISTING OF A STD. MANHOLE ADAPTER GASKET AS SUPPLIED BY THE PIPE MANUFACTURER SHALL BE GROUTED INTO THE INTERCEPTOR WALL NEAR THE CENTER OF THE WALL.
13. PIPE AND FITTINGS TO BE 6" SDR-21.
14. REINFORCING BAR INTERMEDIATE GRADE ASTM A613-62T & A305-56T. REINFORCING WIRE FABRIC - ASTM A185-61T
15. FOR PROPER SIZING OF GREASE TRAP, REFER TO THE NYSDEC PUBLICATION "DESIGN STANDARDS FOR WASTEWATER TREATMENT WORKS - 1988 EDITION".
16. THE GREASE TRAP SHALL BE 1,500 GALLONS MINIMUM.

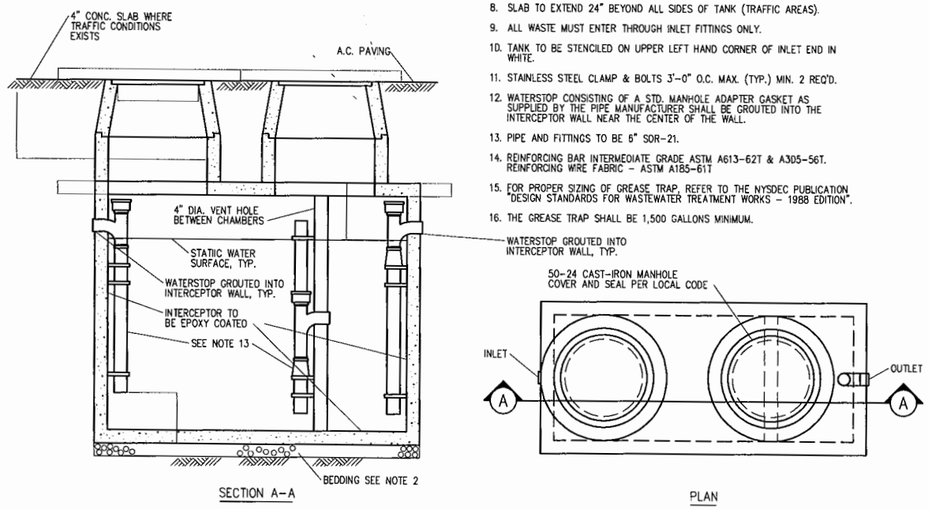

SECTION A-A

PLAN

GREASE TRAP
NOT TO SCALE

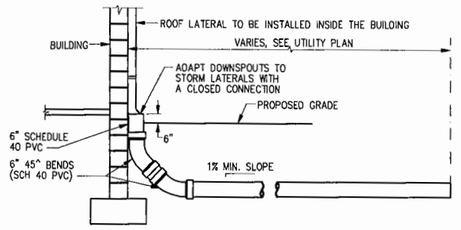

DOWN SPOUT COLLECTOR
NOT TO SCALE

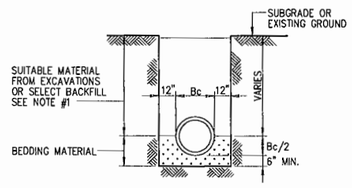

ROCK CONDITION

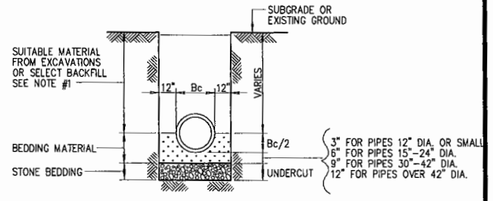

UNSTABLE TRENCH BOTTOM CONDITIONS

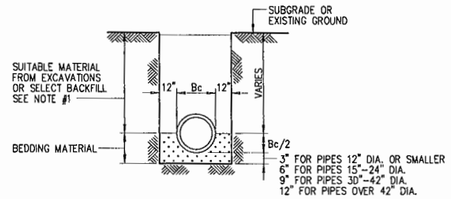

STABLE TRENCH BOTTOM CONDITIONS

SANITARY/STORM SEWER INSTALLATION
NOT TO SCALE

ARBY'S RESTAURANT GROUP, INC.
1155 PERIMETER CENTER WEST
ATLANTA, GA 30338

TYLIN INTERNATIONAL
255 EAST AVENUE
ROCHESTER, NY 14604
(585) 512-2000

NO.	DATE:	DESCRIPTION REVISIONS
1		
2		
3		
4		
5		
6		

DATE

DRAWING TITLE: CONSTRUCTION DETAILS - 1
PROJECT NAME: ARBY'S RESTAURANT
318-320 WEST MAIN STREET, CITY OF BATAVIA, GENESEE COUNTY, NY
CLIENT: VIELE CONSTRUCTION COMPANY
61 SWAN STREET, #3
BATAVIA, NY 14020

PROJECT NO.: 43.XXXX.00	PROJ. MGR.: RLB
DATE: 4/30/15	DRWN. BY: DMD
SCALE: NTS	CHKD. BY: RLB

DRAWING NO:
CD-1
6 OF 8

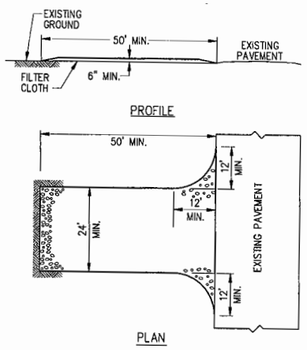

STABILIZED CONSTRUCTION ENTRANCE DETAIL

NOT TO SCALE

CONSTRUCTION SPECIFICATIONS:

1. STONE SIZE – USE 2" STONE, OR RECLAIMED OR RECYCLED CONCRETE EQUIVALENT.
2. LENGTH – NOT LESS THAN 50 FEET.
3. THICKNESS – NOT LESS THAN SIX INCHES.
4. WIDTH – 24 FOOT MINIMUM.
5. FILTER CLOTH – WILL BE PLACED OVER THE ENTIRE AREA PRIOR TO PLACING OF STONE.
6. SURFACE WATER – ALL SURFACE WATER FLOWING OR DIVERTED TOWARD CONSTRUCTION ENTRANCES SHALL BE PIPED ACROSS THE ENTRANCE. IF PIPING IS IMPRACTICAL, A MOUNTABLE BERM WITH 5:1 SLOPES WILL BE PERMITTED.
7. MAINTENANCE – THE ENTRANCE SHALL BE MAINTAINED IN A CONDITION WHICH WILL PREVENT TRACKING OF FLOWING OF SEDIMENT ONTO PUBLIC RIGHT-OF-WAYS. ALL SEDIMENT SPILLED, DROPPED, WASHED OR TRACKED ONTO PUBLIC RIGHT-OF-WAYS MUST BE REMOVED IMMEDIATELY.
8. WHEN WASHING IS REQUIRED, IT SHALL BE DONE ON AN AREA STABILIZED WITH STONE AND WHICH DRAINS INTO AN APPROVED SEDIMENT TRAPPING DEVICE.
9. PERIODIC INSPECTION AND NEEDED MAINTENANCE SHALL BE PROVIDED AFTER EACH RAIN.

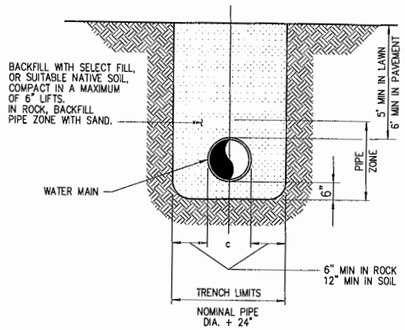

TRENCH

NOT TO SCALE

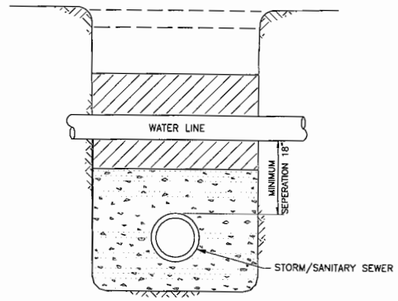

WATERLINE – STORM/SANITARY SEPERATION

NOT TO SCALE

NOTES FOR WATERMAIN INSTALLATION

MATERIALS:

1. a. SELECT BACKFILL SHALL CONFORM TO THE REQUIREMENTS OF NYSDOT SPECIFICATIONS, SECTION 203, ITEM 203.07.
   b. BEDDING MATERIAL SHALL CONFORM TO THE REQUIREMENTS OF NYSDOT SPECIFICATIONS, SECTION 203, ITEM 203.07, EXCEPT THAT MAXIMUM PARTICLE SIZE SHALL BE 2".
   c. SUITABLE MATERIAL FROM THE EXCAVATIONS SHALL BE ANY MINERAL(INORGANIC) SOIL FREE OF MUCK, PEAT, ORGANIC SILT, TOPSOIL AND SOD, AND SHALL HAVE A MAXIMUM PARTICLE SIZE OF 4".
   d. BACKFILL ABOVE THE BEDDING MATERIAL UNDER PUBLIC ROADWAYS SHALL BE WITH SELECT BACKFILL.
   e. BACKFILL ABOVE THE BEDDING MATERIAL UNDER LAWN AREAS MAY BE WITH SUITABLE MATERIAL FROM THE EXCAVATIONS.
   f. BACKFILL ABOVE THE BEDDING MATERIAL UNDER PRIVATE PAVED AREAS MAY BE WITH SUITABLE MATERIAL FROM THE EXCAVATIONS, AS LONG AS COMPACTION REQUIREMENTS ARE MET. IF COMPACTION REQUIREMENTS ARE NOT MET WITH BACKFILL MATERIAL FROM THE EXCAVATIONS, SELECT BACKFILL SHALL BE PROVIDED.
   g. WHEN UNSUITABLE TRENCH BOTTOM CONDITIONS ARE ENCOUNTERED, UNDERCUT AND BACKFILL WITH PRIMARY SIZE STONE, NYSDOT SPECIFICATIONS, SECTION 703-02, PRIMARY SIZE 1,2,3 OR 4. DEPTH OF UNDERCUT SHALL BE AS SPECIFIED BY OWNER'S REPRESENTATIVE.
2. COMPACTION REQUIRED FOR ALL BEDDING, SELECT FILL AND BACKFILL WORK. SEE NYSDOT SPECIFICATIONS, SECTION 203 FOR REQUIREMENTS.
3. ALL TAPS OR CONNECTIONS TO MUNICIPAL WATER MAINS SHALL BE COORDINATED BY THE CONTRACTOR WITH THE LOCAL WATER AGENCY. THE CONTRACTOR SHALL NOT OPERATE ANY MUNICIPAL VALVES.
4. WATER MAIN MATERIALS SHALL BE AS SHOWN ON THE UTILITY PLAN.

WATER SERVICE LINE NOTES

1. WATER SERVICE LINES (LATERALS) SHALL BE CONSTRUCTED IN ACCORDANCE WITH THE REGULATIONS AND SPECIFICATIONS OF THE CITY OF BATAVIA DPW.
2. WATER SERVICE LINES SHALL HAVE A MINIMUM OF FIVE FEET OF COVER FROM FINISHED GRADE IN LAWN AREAS AND SIX FEET OF COVER FROM FINISHED GRADE IN PAVED AREAS.
3. WATER SERVICE LINES SHALL BE SEPARATED AT LEAST TEN FEET, MEASURED FROM THE OUTSIDE OF THE PIPES, FROM SEWER MAINS OR SEPTIC SYSTEMS.
4. WATER SERVICE LINES SHALL BE IDENTIFIED AS: 2" TYPE K COPPER TUBING DOMESTIC WATER SERVICE.
5. WATER METER(S) TO BE LOCATED IN BUILDING MECHANICAL ROOM.

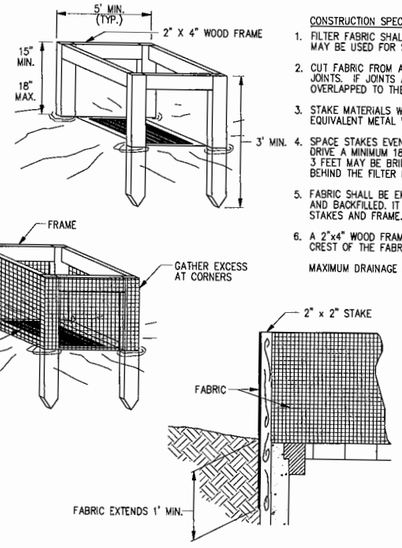

CONSTRUCTION SPECIFICATIONS:

1. FILTER FABRIC SHALL HAVE AN EOS OF 40-85. BURLAP MAY BE USED FOR SHORT TERM APPLICATIONS.
2. CUT FABRIC FROM A CONTINUOUS ROLL TO ELIMINATE JOINTS. IF JOINTS ARE NEEDED THEY SHALL BE OVERLAPPED TO THE NEXT STAKE.
3. STAKE MATERIALS WLL BE STANDARD 2"x4" WOOD OR EQUIVALENT METAL WITH A MINIMUM LENGTH OF 3 FEET.
4. SPACE STAKES EVENLY AROUND INLET 3 FEET APART AND DRIVE A MINIMUM 18 INCHES DEEP. SPANS GREATER THAN 3 FEET MAY BE BRIDGED WITH THE USE OF WIRE MESH BEHIND THE FILTER FABRIC FOR SUPPORT.
5. FABRIC SHALL BE EMBEDDED 1 FOOT MINIMUM BELOW GROUND AND BACKFILLED. IT SHALL BE SECURELY FASTENED TO THE STAKES AND FRAME.
6. A 2"x4" WOOD FRAME SHALL BE COMPLETED AROUND THE CREST OF THE FABRIC FOR OVER FLOW STABILITY.

MAXIMUM DRAINAGE AREA: 1 ACRE

FILTER FABRIC INLET PROTECTION

NOT TO SCALE

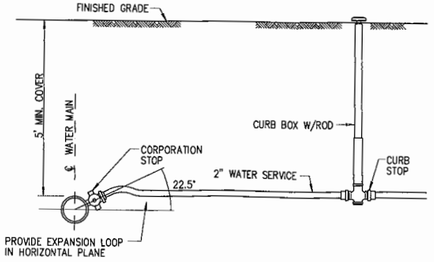

WATER SERVICE INSTALLATION DETAIL

NOT TO SCALE

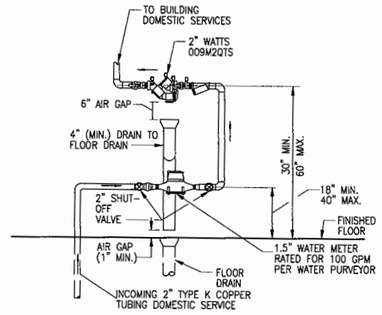

NOTES:

1. PROVIDE SUPPORTS AND HANGERS AS NECESSARY.
2. 30" MIN. CLEARANCE IN FRONT OF BACKFLOW PREVENTER.
3. 12" MIN. CLEAR SPACE ABOVE BACKFLOW PREVENTER
4. ALL PIPING/FITTINGS SHALL BE MECHANICAL JOINT.
5. FLOOR DRAIN IS 4" DIAMETER. REFER TO BUILDING PLUMBING PLANS.

RPZ – ELEVATION VIEW

NOT TO SCALE

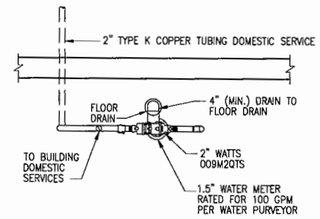

NOTES:

1. PROVIDE SUPPORTS AND HANGERS AS NECESSARY.
2. 30" MIN. CLEARANCE IN FRONT OF BACKFLOW PREVENTER.
3. 12" MIN. CLEAR SPACE ABOVE BACKFLOW PREVENTER

RPZ – PLAN VIEW

NOT TO SCALE

ARBY'S RESTAURANT GROUP, INC.
1155 PERIMETER CENTER WEST
ATLANTA, GA 30338

TYLIN INTERNATIONAL
255 EAST AVENUE
ROCHESTER, NY 14604
(585) 512-2000

NO.	DATE:	DESCRIPTION
1		REVISIONS
2		
3		
4		
5		
6		

DATE

DRAWING TITLE: CONSTRUCTION DETAILS – 2

PROJECT NAME: ARBY'S RESTAURANT
316-320 WEST MAIN STREET, CITY OF BATAVIA, GENESEE COUNTY, NY
61 SWAN STREET, #3
BATAVIA, NY 14020

CLIENT: VIELE CONSTRUCTION COMPANY

PROJECT NO.: 43.XXXX.00	PROJ. MGR: RLB
DATE: 4/30/15	DRWN. BY: DMD
SCALE: NTS	CHKD. BY: RLB

DRAWING NO: CD-2
7 OF 8

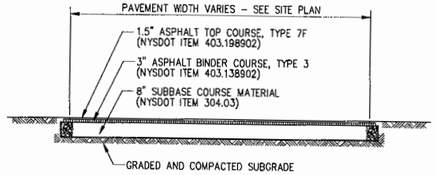

STANDARD DUTY ASPHALT PAVING SECTION
NOT TO SCALE

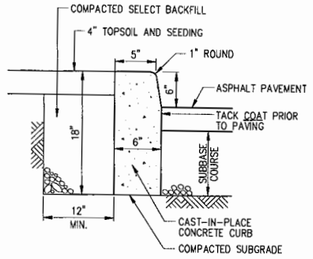

NOTE:
PROVIDE CONTROL JOINTS AT 8' O.C. PROVIDE EXPANSION JOINTS AT 40' O.C.
SEAL JOINTS WITH ASPHALT CEMENT, NYSDOT SPECIFICATIONS 702-0700

CONCRETE CURB DETAIL
NOT TO SCALE

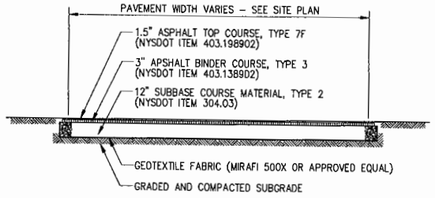

HEAVY DUTY ASPHALT PAVING SECTION
NOT TO SCALE

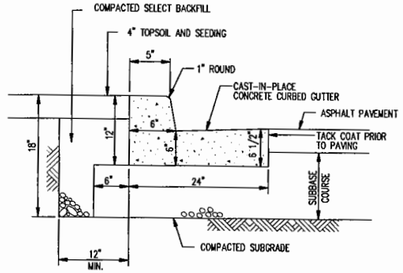

NOTE:
PROVIDE CONTROL JOINTS AT 8' O.C.PROVIDE EXPANSION JOINTS AT 40' O.C.
SEAL JOINTS WITH ASPHALT CEMENT, NYSDOT SPECIFICATIONS 702-0700

CONCRETE CURBED GUTTER DETAIL
NOT TO SCALE

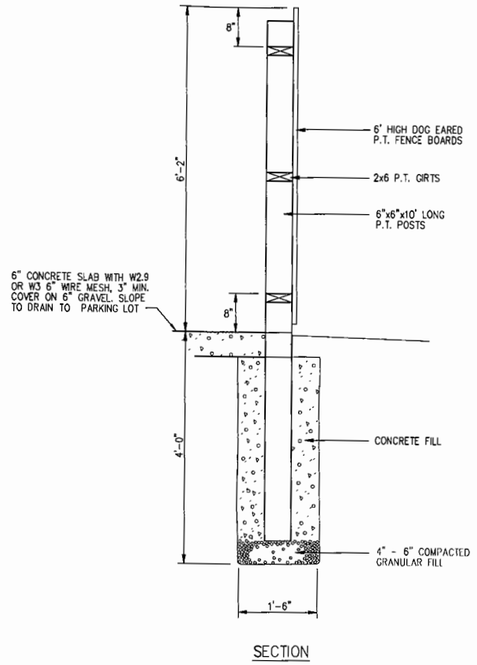

SECTION

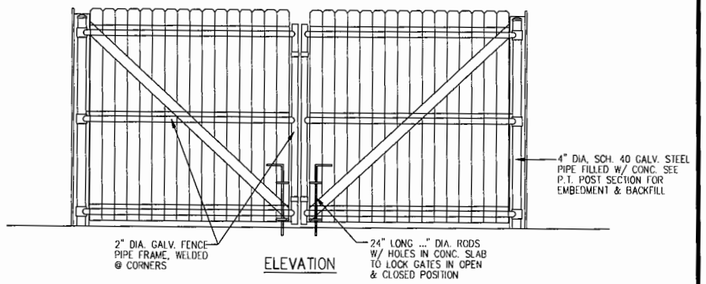

ELEVATION

DUMPSTER ENCLOSURE
NOT TO SCALE

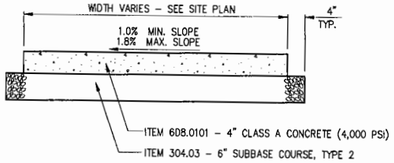

NOTE:
ADDITIONAL SUBBASE COURSE SHALL BE PLACED WHERE FILL IS REQUIRED TO OBTAIN PROPER SUBGRADE ELEVATION OR TO REPLACE UNSUITABLE SUBGRADE MATERIAL.

TYPICAL CONCRETE SIDEWALK SECTION
NOT TO SCALE

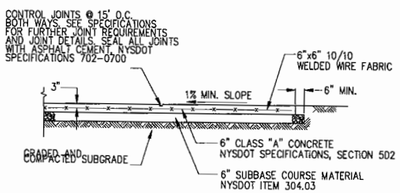

EXTERIOR CONCRETE SLAB
NOT TO SCALE

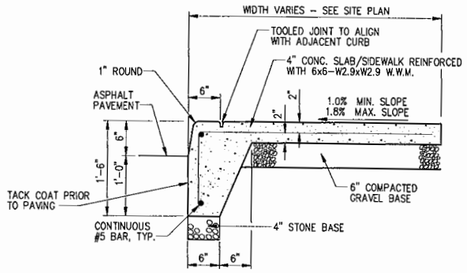

NOTES:
EXPANSION JOINTS – SPACED AT A MAXIMUM OF 20 FEET.
CONTROL JOINTS – SPACE EQUALLY TO WIDTH OF SIDEWALK, MAXIMUM 5'-0" APART.

INTEGRAL CONCRETE CURB\SIDEWALK DETAIL
NOT TO SCALE

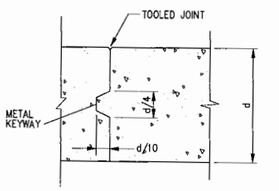

TYPICAL CONCRETE CONSTRUCTION JOINT
NOT TO SCALE

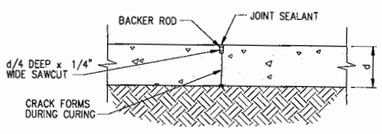

TYPICAL CONCRETE CONTRACTION JOINT
NOT TO SCALE

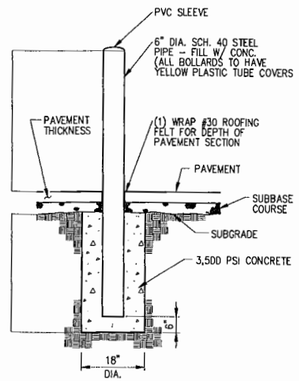

SECTION

BOLLARD DETAIL
NOT TO SCALE

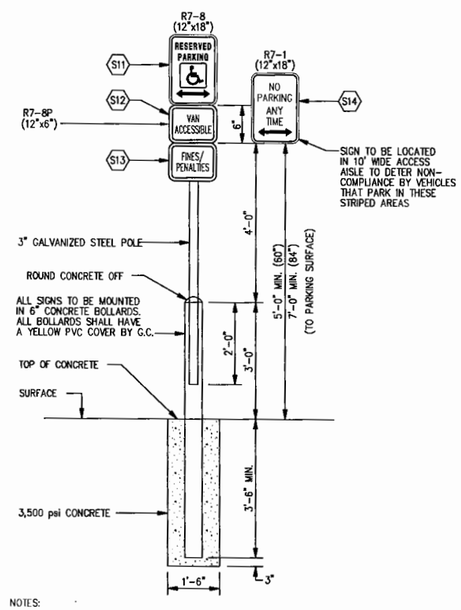

NOTES:

1. ACCESSIBLE PARKING SIGNS SHALL CONFORM TO NATIONAL MUTCD, AND CURRENT STATE AND LOCAL CODES AND REGULATIONS.
2. HEIGHT TO BOTTOM OF LOWEST REQUIRED SIGN TO BE 60" MIN. TO 84" MAX. ABOVE FINISHED GRADE. THE RESERVED PARKING, VAN ACCESSIBLE AND NO PARKING SIGNS ARE INCLUDED IN THE CALCULATION. THE VIOLATION/TOWING FEE SIGN IS NOT INCLUDED. SOME LOCAL JURISDICTIONS WILL REQUIRE THE SIGNS TO BE EXACTLY 60". THE G.C. IS TO VERIFY LOCAL REQUIREMENTS. ALL ADA ASSOCIATED SIGNS TO BE 84" MAX. UNLESS THE TOWN REQUIRES 60".
3. ALL SIGNS MUST INSTALLED PERPENDICULAR TO THE PARKING STALL.
4. POSITION THE "NO PARKING ANY TIME" BOLLARD/SIGNAGE SUCH THAT THERE IS A MIN. OF 32" (36" MIN. PREFERRED) PAST THE BOLLARD WITHIN THE HATCHED ACCESS AISLE AREA.

ACCESSIBLE PARKING SIGN DETAIL
NOT TO SCALE

ARBY'S RESTAURANT GROUP, INC.
1155 PERIMETER CENTER WEST
ATLANTA, GA 30338

NO.	DATE:	DESCRIPTION REVISIONS
1		
2		
3		
4		
5		
6		

DATE

T·Y LIN INTERNATIONAL
255 EAST AVENUE
ROCHESTER, NY 14604
(585) 512-2000

DRAWING TITLE: CONSTRUCTION DETAILS – 3
PROJECT NAME: ARBY'S RESTAURANT
316-320 WEST MAIN STREET, CITY OF BATAVIA, GENESEE COUNTY, NY
CLIENT: VIELE CONSTRUCTION COMPANY
61 SWAN STREET, #3
BATAVIA, NY 14020

PROJECT NO.: 43.XXXX.00	PROJ. MGR.: RLB
DATE: 4/30/15	DRWN. BY: DMD
SCALE: NTS	CHKD. BY: RLB

DRAWING NO: CD-3
8 OF 8

T·Y·LIN INTERNATIONAL
engineers | planners | scientists

April 30, 2015

City of Batavia
City Hall
One Batavia City Centre

ATTN: Zoning Board of Appeals Members

RE: Request for Area Variances
Arby's Restaurant
316-320 West Main Street

Dear Board Members:

On behalf of Viele Construction Company, we are submitting the following information in support of area variances:

- Check in the amount of $100.00
- (12) copies of the Letter of Intent, Summary of requested Area Variances (Exhibit A) and responses to the Area Variance Standards (Exhibit B)
- Original and (11) copies of the Application to the Zoning Board of Appeals
- (12) copies of the Short Form EAF
- (12) 11x17 copies of the Building Elevations
- (12) 11x17 copies of the Site Plan

We respectfully request to be placed on the agenda for the May 28th, 2015 Zoning Board of Appeals meeting. Viele Construction Company is requesting area variances to allow the construction of an Arby's Restaurant on a combination of three parcels. Refer to Exhibit A and B attached for an outline of the requested area variances and the justifications for granting them.

The project site is located on the north side of West Main Street (NYS Route 5) at the intersection with Vernon Avenue. The proposed project site consists of three separate individual residential properties. It is proposed to construct an approx. 2,100 sq. ft. restaurant building and associated site features; including dumpster enclosure, drive-thru\access lanes, asphalt parking, utilities, landscaping, lighting and signage.

Should you have any questions or need additional information, please contact us.

Sincerely,
T.Y.Lin International

Randy Bebout
RLB/ams

Enclosures

Cc: Viele Construction Company, Ron Viele

T:\rochester\user\temp project folder\Arby's\corresp\4-29-15_ZBA Submission\ZBA_Letter of Intent_4-29-15

EXHIBIT A

The reasons for requesting the area variances are as follows:

1. Minimum front parking setback\buffer: 10 ft. required where x ft. is proposed
2. Minimum rear parking setback\buffer between commercial and residential properties: 10 ft. required where x ft. is proposed
3. Minimum distance of driveway from side lot line: 20 ft. required where x ft. is proposed
4. Minimum driveway width: 20 ft. required where 15 ft. is proposed
5. Minimum number of parking spaces: 84 required (4 spaces/100 sq. ft. of floor area) where 24 are proposed
6. Minimum distance from drive-thru restaurant (place of public assembly) to garage: 500 ft. required, xx ft. proposed (Chrysler\Dodge\Jeep dealership)
7. Building height: 18 ft. maximum allowed where 19.33 ft. is proposed

EXHIBIT B

In making its determination, the Zoning Board of Appeals shall take into consideration the benefit to the applicant if the variance is granted, as weighed against the detriment to the health, safety, moral, aesthetics and welfare of the neighborhood or community. In making such determination the Board shall also consider:

1. Whether an undesirable change will be produced in the character of the neighborhood or a detriment to nearby properties will be created by the granting of the area variance.

   There will be mitigated impacts as a result of granting the requested area variances. A solid fence will be installed along the side and rear property lines to prevent vehicle headlights shining on the adjacent residential property and to avoid views of parked vehicles on the commercial property. The property borders a commercial property used for vehicle auto sales to the east so no negative impacts to that property will be created.

2. Whether the benefit sought by the applicant can be achieved by some method, feasible for the applicant to pursue, other than an area variance.

   There are no other means for the applicant to achieve the benefits sought. The variances needed for parking\driveway setbacks are a result of the existing lot size. The proposed building height that exceeds the maximum allowed is limited to a minor portion of the building.

3. Whether the requested area variance is substantial.

   Some of the requested area variances are substantial based on percentage of request, though the variances requested are the minimum needed to be able to develop the parcel and adequately operate the business. The benefit of granting the variances outweighs any detriments that may result.

4. Whether the proposed variance will have an adverse effect or impact on the physical or environmental conditions in the neighborhood or district.

   The requested area variances will not result in any adverse or negative impacts to the environment. The building will be more energy efficient than the existing Arby's restaurant and will utilize LED lighting and sign fixtures. There is a slight increase (2,406 sq. ft.) in impervious area resulting in slightly more storm water runoff from the site. This will be directed to the storm sewer system on Vernon Avenue.

5. Whether the alleged difficulty was self-created, which shall be relevant to the decision of the Board of Appeals but shall not necessarily preclude the granting of the area variance.

   The requested area variances are not self created but a result of the size of the property available. Even if additional property was available, if would not be economically feasible to construct the project with the additional land costs.

CITY OF BATAVIA
APPLICATION TO THE ZONING BOARD OF APPEALS

Application No.: _____

Hearing Date/Time: _____

APPLICANT: Viele Construction Company RonaldVIELE@YMAIL.COM

Name	E-Mail Address
61 Swan St., #3	716-474-0237
Street Address	Phone / Fax
Batavia NY 14202	
City State Zip	

STATUS: ___ Owner ___ Agent for Owner X Contractor

OWNER: 61 Swan Street of Batavia, Inc. RonaldVIELE@YMAIL.COM

Name	E-Mail Address
61 Swan St. #3	716-474-0237
Street Address	Phone / Fax
Batavia NY 14202	
City State Zip	

LOCATION OF PROPERTY: 316-320 West Main Street

DETAILED DESCRIPTION OF REQUEST: Request Area Variances to Allow Construction of a New Arbys Restaurant

Applicant must be present at the hearing date. Failure to do so will result in the application being discarded. It is the responsibility of the applicant to present evidence sufficient to satisfy the Zoning Board of Appeals that the benefit of the applicant does not outweigh the health, safety, morals, aesthetics and general welfare of the community or neighborhood.

Applicant's Signature _____ Date 4/29/15

Owner's Signature _____ Date 4/29/15

To be Filled out by Zoning Officer

TAX PARCEL: 84.006-3-36, 84.006-3-44, 84.006-3-43 **ZONING DISTRICT:** C-2 **FLOOD PLAIN:** No

TYPE OF APPEAL:
- ✓ Area Variance (8)
- ___ Use Variance
- ___ Interpretation
- ___ Decision of Planning Committee

FEE:
- ___ $50 (One or Two Family Use)
- ✓ $100 (All other Uses)

Provision(s) of the Zoning Ordinance Appealed: 190-39 B(1)(c)(3), 190-39 B(1)(b), 190-29 A, 190-37 E(3), 190-37 E(3), 190-37 E(3), 190-37 E(10), 190-37 E(8)

Short Environmental Assessment Form
Part 1 - Project Information

Instructions for Completing

Part 1 - Project Information. The applicant or project sponsor is responsible for the completion of Part 1. Responses become part of the application for approval or funding, are subject to public review, and may be subject to further verification. Complete Part 1 based on information currently available. If additional research or investigation would be needed to fully respond to any item, please answer as thoroughly as possible based on current information.

Complete all items in Part 1. You may also provide any additional information which you believe will be needed by or useful to the lead agency; attach additional pages as necessary to supplement any item.

Part 1 - Project and Sponsor Information

Name of Action or Project:
Proposed Arby's Restaurant

Project Location (describe, and attach a location map):
316-320 West Main Street, City of Batavia

Brief Description of Proposed Action:
Construction of a new 2,100 sq. ft. restaurant building, dumpster enclosure and associated site improvements consisting of new access drives onto West Main Street and Vernon Avenue, new asphalt parking area and drives, new utilities, lighting, landscaping and signage

Name of Applicant or Sponsor:	Telephone: 716-474-0237
Viele Construction Company	E-Mail: ronaldviele@ymail.com

Address:
61 Swan Street, #3

City/PO:	State:	Zip Code:
Batavia	New York	14020

	NO	YES
1. Does the proposed action only involve the legislative adoption of a plan, local law, ordinance, administrative rule, or regulation? If Yes, attach a narrative description of the intent of the proposed action and the environmental resources that may be affected in the municipality and proceed to Part 2. If no, continue to question 2.	☐	☑
2. Does the proposed action require a permit, approval or funding from any other governmental Agency? If Yes, list agency(s) name and permit or approval:	☐	☑

3.a. Total acreage of the site of the proposed action? 0.5+/- acres
b. Total acreage to be physically disturbed? 0.5+/- acres
c. Total acreage (project site and any contiguous properties) owned or controlled by the applicant or project sponsor? 0.5+/- acres

4. Check all land uses that occur on, adjoining and near the proposed action.
☐ Urban ☐ Rural (non-agriculture) ☐ Industrial ☑ Commercial ☑ Residential (suburban)
☐ Forest ☐ Agriculture ☐ Aquatic ☐ Other (specify): _____
☐ Parkland

	NO	YES	N/A
5. Is the proposed action,			
a. A permitted use under the zoning regulations?	☐	☑	☐
b. Consistent with the adopted comprehensive plan?	☐	☑	☐

	NO	YES
6. Is the proposed action consistent with the predominant character of the existing built or natural landscape?	☐	☑
7. Is the site of the proposed action located in, or does it adjoin, a state listed Critical Environmental Area? If Yes, identify: _____	☑	☐
8. a. Will the proposed action result in a substantial increase in traffic above present levels?	☑	☐
b. Are public transportation service(s) available at or near the site of the proposed action?	☐	☑
c. Are any pedestrian accommodations or bicycle routes available on or near site of the proposed action?	☐	☑
9. Does the proposed action meet or exceed the state energy code requirements? If the proposed action will exceed requirements, describe design features and technologies: _____	☐	☑
10. Will the proposed action connect to an existing public/private water supply? If No, describe method for providing potable water: _____	☐	☑
11. Will the proposed action connect to existing wastewater utilities? If No, describe method for providing wastewater treatment: _____	☐	☑
12. a. Does the site contain a structure that is listed on either the State or National Register of Historic Places?	☑	☐
b. Is the proposed action located in an archeological sensitive area?	☐	☑
13. a. Does any portion of the site of the proposed action, or lands adjoining the proposed action, contain wetlands or other waterbodies regulated by a federal, state or local agency?	☐	☑
b. Would the proposed action physically alter, or encroach into, any existing wetland or waterbody? If Yes, identify the wetland or waterbody and extent of alterations in square feet or acres: _____	☑	☐

14. Identify the typical habitat types that occur on, or are likely to be found on the project site. Check all that apply:

☐ Shoreline ☐ Forest ☐ Agricultural/grasslands ☐ Early mid-successional
☐ Wetland ☐ Urban ☑ Suburban

	NO	YES
15. Does the site of the proposed action contain any species of animal, or associated habitats, listed by the State or Federal government as threatened or endangered?	☑	☐
16. Is the project site located in the 100 year flood plain?	☑	☐
17. Will the proposed action create storm water discharge, either from point or non-point sources? If Yes,		
a. Will storm water discharges flow to adjacent properties? ☑ NO ☐ YES	☐	☑
b. Will storm water discharges be directed to established conveyance systems (runoff and storm drains)? If Yes, briefly describe: ☐ NO ☑ YES		

storm water sheet flow will be collected on-site via new catch basins and directed to the existing storm sewer system on Vernon Avenue via a closed storm sewer pipe system

	NO	YES
18. Does the proposed action include construction or other activities that result in the impoundment of water or other liquids (e.g. retention pond, waste lagoon, dam)? If Yes, explain purpose and size:	☑	☐
19. Has the site of the proposed action or an adjoining property been the location of an active or closed solid waste management facility? If Yes, describe:	☑	☐
20. Has the site of the proposed action or an adjoining property been the subject of remediation (ongoing or completed) for hazardous waste? If Yes, describe:	☑	☐

I AFFIRM THAT THE INFORMATION PROVIDED ABOVE IS TRUE AND ACCURATE TO THE BEST OF MY KNOWLEDGE

Applicant/sponsor name: Hale Construction Company Date: 4/29/15

Signature:

PRINT FORM

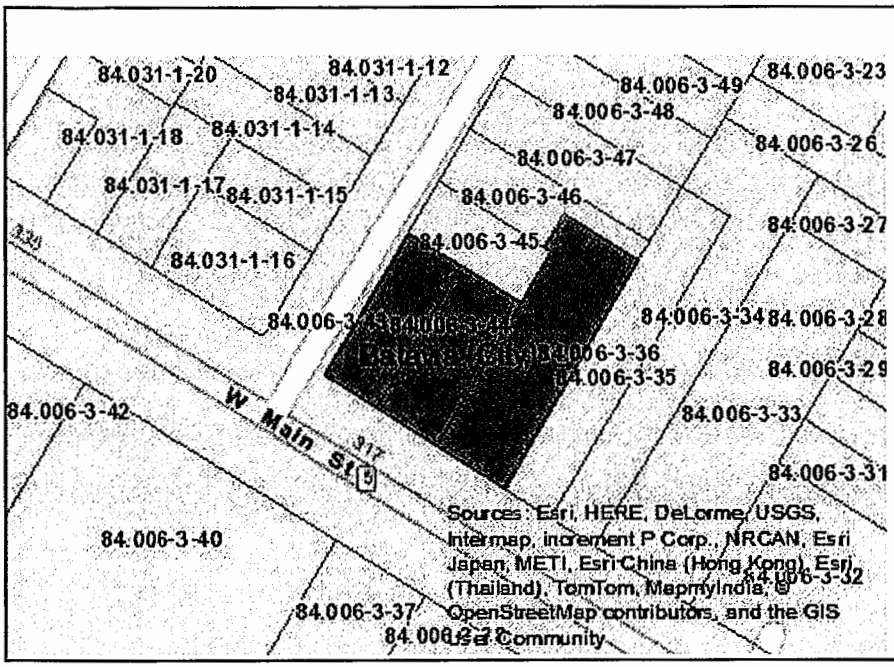

Disclaimer: The EAF Mapper is a screening tool intended to assist project sponsors and reviewing agencies in preparing an environmental assessment form (EAF). Not all questions asked in the EAF are answered by the EAF Mapper. Additional information on any EAF question can be obtained by consulting the EAF Workbooks. Although the EAF Mapper provides the most up-to-date digital data available to DEC, you may also need to contact local or other data sources in order to obtain data not provided by the Mapper. Digital data is not a substitute for agency determinations.

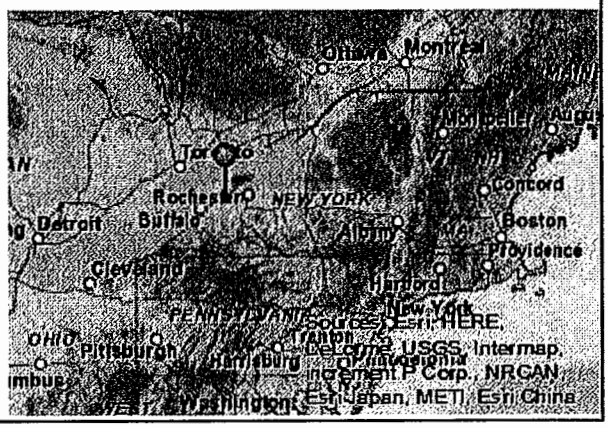

Part 1 / Question 7 [Critical Environmental Area]	No
Part 1 / Question 12a [National Register of Historic Places]	No
Part 1 / Question 12b [Archeological Sites]	Yes
Part 1 / Question 13a [Wetlands or Other Regulated Waterbodies]	Yes - Digital mapping information on local and federal wetlands and waterbodies is known to be incomplete. Refer to EAF Workbook.
Part 1 / Question 15 [Threatened or Endangered Animal]	No
Part 1 / Question 16 [100 Year Flood Plain]	Digital mapping data are not available or are incomplete. Refer to EAF Workbook.
Part 1 / Question 20 [Remediation Site]	No

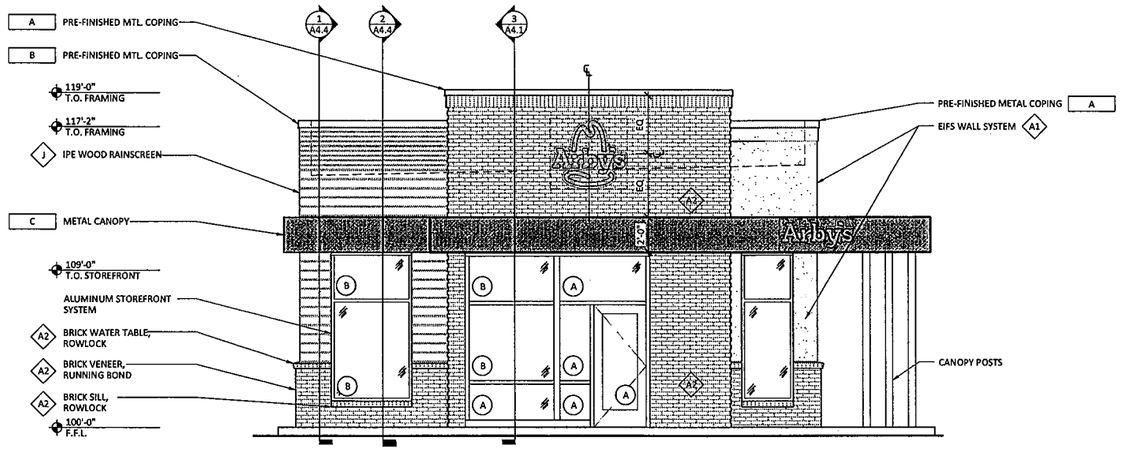

1 A2.1 **FRONT ELEVATION**

1/4" = 1'-0"

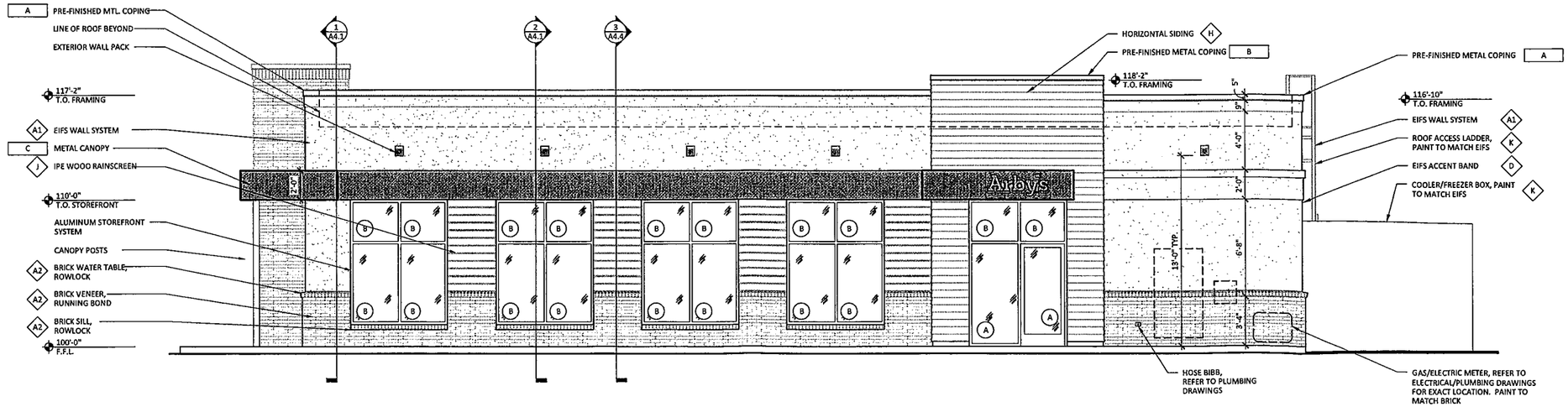

2 A2.1 **SIDE ELEVATION**

1/4" = 1'-0"

FINISH SCHEDULE

MARK	MANUFACTURER	DESCRIPTION	NOTES
GLASS TYPES			
A	---	1" CLEAR TEMPERED INSULATED GLASS UNIT	LOW "E"
B	---	1" CLEAR INSULATED GLASS UNIT	LOW "E"
C	---	1/4" CLEAR TEMPERED SAFETY GLASS	IN DRIVE THRU WINDOW UNIT
FINISHES			
A1	DRYVIT	#310 CHINA WHITE SANDBLAST TEXTURE	EIFS WALL SYSTEM
A2	COUNTY MATERIALS	HERITAGE COLLECTION WHITE NF	SMOOTH
B	NOT USED	---	---
C	NOT USED	---	---
D	SHERWIN WILLIAMS	PRIMER: LOXON ACRYLIC MASONRY PRIMER, A-24-300 FINISH: DTM ACRYLIC GLOSS, B66R38	TINT PRIMER TO SW P2 USE AT LEAST (2) TWO COATS OF FINISH
E	NOT USED	---	---
F	SHERWIN WILUAMS	#SW 7024 FUNCTIONAL GRAY	SATIN FINISH
G	NOT USED	---	---
H	JAMES HARDIE	ARTISAN LAP SIDING - SMOOTH IRON GRAY	5/8" THICK 7 1/4" WIDTH (6" EXPOSURE)
J	IPE WOOD RAINSCREEN	---	PROVIDE UV SEALER
K	SHERWIN WILUAMS	#SW 2123 WHITE	SATIN FINISH
METALS			
A	EXCEPTIONAL METALS/ DURO-LAST	TWO-PIECE SNAP-ON METAL COPING REGAL WHITE/ DURO-LAST #SR70/TE87	FOR USE WITH DURO-LAST ROOFING SYSTEM DETAIL FA3110
B	EXCEPTIONAL METALS/ DURO-LAST	TWO-PIECE SNAP-ON METAL COPING DARK BRONZE/ DURO-LAST #SR70/TE87	FOR USE WITH DURO-LAST ROOFING SYSTEM DETAIL FA3110
C	PRE-FABRIACTED AWNING	PRIMER: BOND-PLEX WATERBASED ACRYLIC COATING, B71-200 FINISH: DTM ACRYLIC GLASS, B66R38	TINT PRIMER TO SW P2 USE AT LEAST (2) TWO COATS OF FINISH

1. PAINT ALL EXPOSED METERS, SERVICE ENTRANCES, GAS PIPE, ROOF ACCESS LADDER, ETC. TO MATCH ADJACENT EXTERIOR WALL SURFACE.
2. PROVIDE TEMPORARY MASKING OF EXPOSED STAINLESS STEEL DURING ACID WASHING OF MASONRY.
3. PROVIDE SOLID MASONRY UNITS AT THE ENDS OF JAMBS , SILLS, ETC.
4. TO HELP PREVENT EFFLORESCENCE ALL MASONRY UNITS ARE TO BE MANUFACTURED WITH INTEGRAL WATER REPELLANT. WATER REPELLENT ADMIXTURE IS TO BE MIXED IN AND PRE-WASHED SAND IS TO BE USED IN ALL MORTAR MIXES.
5. MAKE SURE THAT WALL WEEPS AND FLASHING ARE INSTALLED CORRECTLY. DO NOT BLOCK WEEPS. REFER TO SPECIFICATIONS ON SHEET SP-2.

r e d
architecture + planning
855 grandview ave.
suite 295
columbus, ohio 43215
tel: 614.487.8770
fax: 614.487.8777

NOT FOR CONSTRUCTION, FOR REFERENCE ONLY

PROPRIETARY INFORMATION NOTICE:
THESE PROTOTYPICAL DOCUMENTS MAY REQUIRE REVISIONS TO CONFORM TO LOCAL, STATE, AND FEDERAL CODES, ORDINANCES OR OTHER CONDITIONS. THE DESIGN CONCEPTS EMBODIED IN THESE DOCUMENTS ARE SPECIFICALLY FOR THIS PROJECT. INFORMATION CONTAINED HEREIN REMAINS THE SOLE PROPERTY OF ARBY'S RESTAURANT GROUP, IS CONFIDENTIAL AND PROPRIETARY AND IS NOT TO BE COPIED, REPRODUCED, DISCLOSED OR OTHERWISE TRANSFERED TO OTHER PARTIES IN ANY FORM WHATSOEVER WITHOUT THE EXPRESS WRITTEN CONSENT OF ARBY'S RESTAURANT GROUP.

Arby's

Copyright© 2014 by Arby's Restaurant Group

ARBY'S RESTAURANT GROUP
INSPIRE PROTOTYPE - 2014 VERSION
PROJECT ADDRESS
CITY, STATE 12345

PROJECT NUMBER: ARG064

ISSUE	DATE
PROTOTYPE	JUNE 25, 2014

EXTERIOR ELEVATIONS

SHEET: A2.1

6/24/2014 3:52 PM

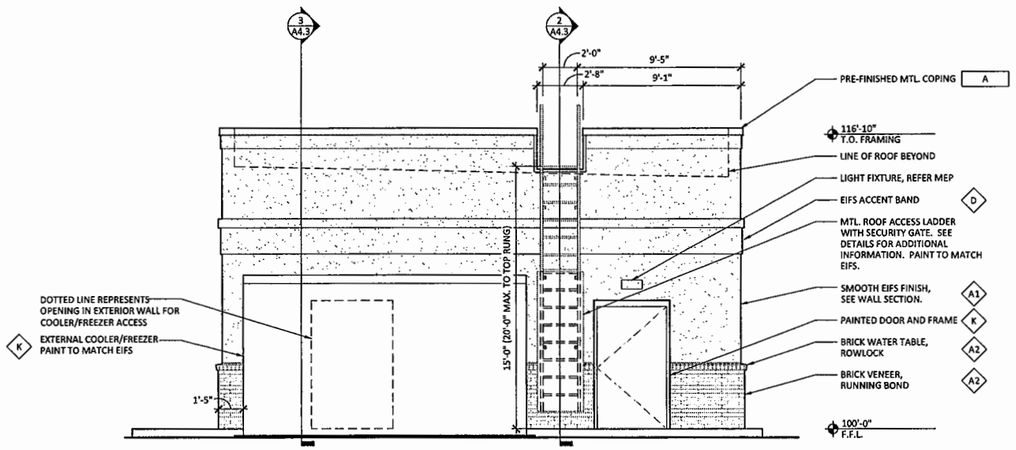

1 A2.2 REAR ELEVATION

1/4" = 1'-0"

FINISH SCHEDULE

MARK	MANUFACTURER	DESCRIPTION	NOTES
GLASS TYPES			
A	---	1" CLEAR TEMPERED INSULATED GLASS UNIT	LOW "E"
B	---	1" CLEAR INSULATED GLASS UNIT	LOW "E"
C	---	1/4" CLEAR TEMPERED SAFETY GLASS	IN DRIVE THRU WINDOW UNIT
FINISHES			
A1	DRYVIT	#310 CHINA WHITE SANDBLAST TEXTURE	EIFS WALL SYSTEM
A2	COUNTY MATERIALS	HERITAGE COLLECTION WHITE NF	SMOOTH
B	NOT USED	---	---
C	NOT USED	---	---
D	SHERWIN WILLIAMS	PRIMER: LOXON ACRYLIC MASONRY PRIMER, A-24-300 FINISH: DTM ACRYLIC GLOSS, B66R38	TINT PRIMER TO SW P2 USE AT LEAST (2) TWO COATS OF FINISH
E	NOT USED	---	---
F	SHERWIN WILLIAMS	#SW 7024 FUNCTIONAL GRAY	SATIN FINISH
G	NOT USED	---	---
H	JAMES HARDIE	ARTISAN LAP SIDING - SMOOTH IRON GRAY	5/8" THICK 7 1/4" WIDTH (6" EXPOSURE)
J	IPE WOOD RAINSCREEN	---	PROVIDE UV SEALER
K	SHERWIN WILLIAMS	#SW 2123 WHITE	SATIN FINISH
METALS			
A	EXCEPTIONAL METALS/ DURO-LAST	TWO-PIECE SNAP-ON METAL COPING REGAL WHITE/ DURO-LAST #SR70/TE87	FOR USE WITH DURO-LAST ROOFING SYSTEM DETAIL FA3110
B	EXCEPTIONAL METALS/ DURO-LAST	TWO-PIECE SNAP-ON METAL COPING DARK BRONZE/ DURO-LAST #SR70/TE87	FOR USE WITH DURO-LAST ROOFING SYSTEM DETAIL FA3110
C	PRE-FABRIACTED AWNING	PRIMER: BOND-PLEX WATERBASED ACRYLIC COATING, B71-200 FINISH: DTM ACRYLIC GLASS, B66R38	TINT PRIMER TO SW P2 USE AT LEAST (2) TWO COATS OF FINISH

1. PAINT ALL EXPOSED METERS, SERVICE ENTRANCES, GAS PIPE, ROOF ACCESS LADDER, ETC. TO MATCH ADJACENT EXTERIOR WALL SURFACE.
2. PROVIDE TEMPORARY MASKING OF EXPOSED STAINLESS STEEL DURING ACID WASHING OF MASONRY.
3. PROVIDE SOLID MASONRY UNITS AT THE ENDS OF JAMBS , SILLS, ETC.
4. TO HELP PREVENT EFFLORESCENCE ALL MASONRY UNITS ARE TO BE MANUFACTURED WITH INTEGRAL WATER REPELLANT. WATER REPELLENT ADMIXTURE IS TO BE MIXED IN AND PRE-WASHED SAND IS TO BE USED IN ALL MORTAR MIXES.
5. MAKE SURE THAT WALL WEEPS AND FLASHING ARE INSTALLED CORRECTLY. DO NOT BLOCK WEEPS. REFER TO SPECIFICATIONS ON SHEET SP-2.

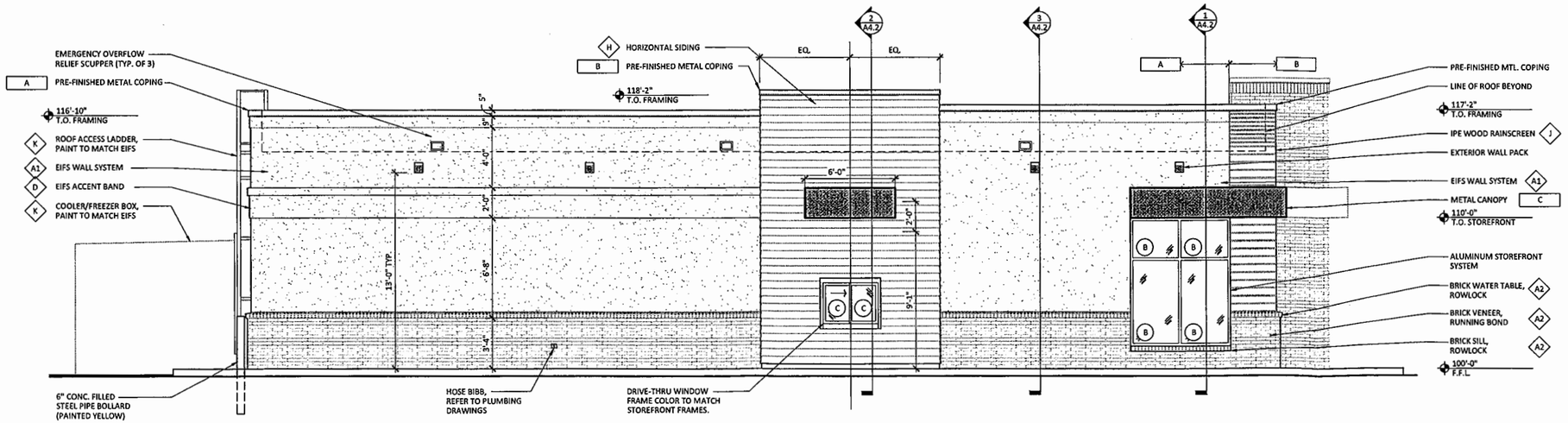

2 A2.2 SIDE ELEVATION

1/4" = 1'-0"

red architecture + planning
855 grandview ave. suite 295
columbus, ohio 43215
tel: 614.487.8770
fax: 614.487.8777

PROPRIETARY INFORMATION NOTICE:
THESE PROTOTYPICAL DOCUMENTS MAY REQUIRE REVISIONS TO CONFORM TO LOCAL, STATE, AND FEDERAL CODES, ORDINANCES OR OTHER CONDITIONS. THE DESIGN CONCEPTS EMBODIED IN THESE DOCUMENTS ARE SPECIFICALLY FOR THIS PROJECT. INFORMATION CONTAINED HEREIN REMAINS THE SOLE PROPERTY OF ARBY'S RESTAURANT GROUP, IS CONFIDENTIAL AND PROPRIETARY AND IS NOT TO BE COPIED, REPRODUCED, DISCLOSED OR OTHERWISE TRANSFERED TO OTHER PARTIES IN ANY FORM WHATSOEVER WITHOUT THE EXPRESS WRITTEN CONSENT OF ARBY'S RESTAURANT GROUP.

Arby's

Copyright© 2014 by Arby's Restaurant Group

NOT FOR CONSTRUCTION, FOR REFERENCE ONLY

ARBY'S RESTAURANT GROUP
INSPIRE PROTOTYPE - 2014 VERSION
PROJECT ADDRESS
CITY, STATE 12345

PROJECT NUMBER: ARG064

ISSUE	DATE
PROTOTYPE	JUNE 25, 2014

EXTERIOR ELEVATIONS

SHEET: A2.2

6/24/2014 3:52 PM

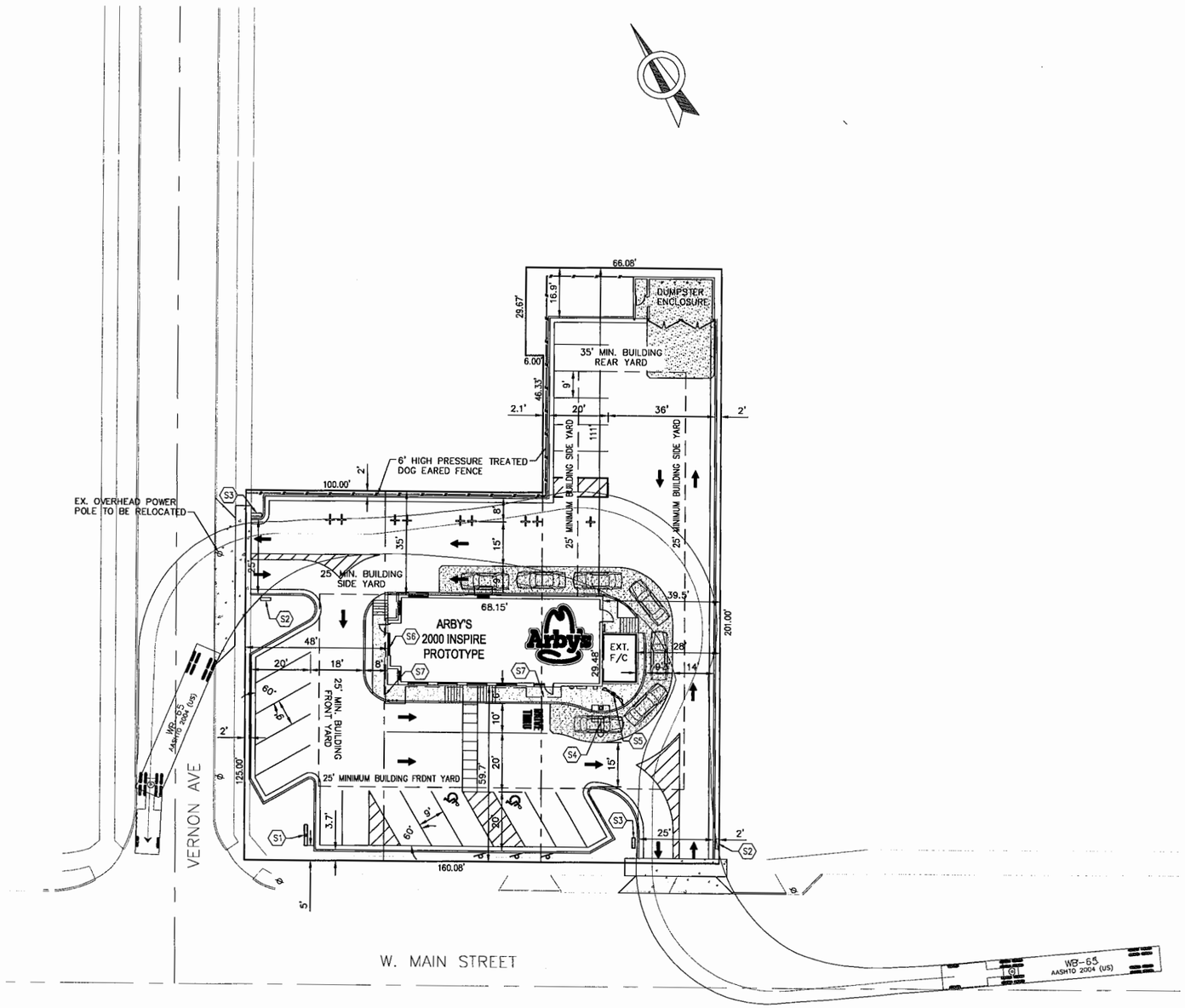

SITE DATA		
TAX ACCOUNT NUMBERS: 84.006-3-43, 84.006-3-44, 84.006-3-36		
PROPOSED LEASE AREA: 0.568 ACRES (24,754 SQ. FT.)		
CURRENT ZONING: C-2 (GENERAL COMMERCIAL DISTRICT)		
ZONING REQUIREMENTS	REQUIRED	PROPOSED
MINIMUM LOT AREA	15,000 SQ. FT.	24,754 SQ. FT.
MINIMUM LOT WIDTH	125 FT.	125 FT.
MAX. BUILDING/LOT COVERAGE	20% (6,815 SQ. FT.)	8.5% (2,100 SQ. FT.)
MAX. BUILDING HEIGHT	18 FT.	19.33 FT.
BUILDING SETBACKS		
FRONT	25 FT.	48 FT.
SIDE	25 FT.	28 FT.
REAR	35 FT.	111 FT.
PARKING SETBACKS		
FRONT	10 FT.	2 FT.
SIDE	10 FT.	2 FT.
REAR	10 FT.	16.9 FT.
ORIVE AISLES ONE-WAY TWO-WAY	 20 FT. 24 FT.	 14 FT. 25 FT.
MINIMUM DRIVEWAY SETBACK FROM SIDE PROPERTY LINE	20 FT.	2 FT.
PARKING STALL SIZE 60° PARKING 90° PARKING	 8'x19' 8'x19'	 9'x20' 9'x20'
PARKING RESTAURANT: MIN. PARKING SPACES RESTAURANT, W\DRIVE THRU: 4 SPACES PER 100 S.F. OF NET FLOOR AREA		
TOTAL SPACES	39	24

GENERAL NOTES

1. COORDINATE START-UP AND ALL CONSTRUCTION ACTIVITIES WITH OWNER.
2. CONSTRUCTION METHODS AND OWNER'S MATERIALS NOT SPECIFIED IN THESE PLANS ARE TO MEET OR EXCEED THE OWNER'S STANDARD SPECIFICATIONS.
3. THE CONTRACTOR SHALL CONDUCT THE WORK IN A MANNER THAT WILL INSURE, AS FAR AS PRACTICABLE, THE LEAST OBSTRUCTION TO TRAFFIC AND SHALL PROVIDE FOR THE CONVENIENCE AND SAFETY OF THE GENERAL PUBUC ALONG AND ADJACENT TO ROADS IN THE CONSTRUCTION AREA, IN AN ADEQUATE AND SATISFACTORY MANNER.
4. THE CONTRACTOR SHALL LOCATE, MARK, SAFEGUARD AND PRESERVE ALL SURVEY CONTROL MONUMENTS AND R.O.W. MONUMENTS IN THE AREAS OF CONSTRUCTION.
5. THE CONTRACTOR IS RESPONSIBLE TO ENSURE THAT ALL REQUIRED INSPECTIONS AND/OR CERTIFICATIONS REQUIRED BY CODES AND/OR THE JURISDICTIONAL AUTHORITY ARE COMPLETED.
6. THE CONTRACTOR SHALL COORDINATE WITH ALL UTILITY COMPANIES TO DETERMINE EXACT POINT OF SERVICE CONNECTION AT EXISTING UTILITY. REFER TO THE BUILDING ELECTRICAL AND PLUMBING DRAWINGS FOR UTILITY SERVICE ENTRANCE LOCATIONS, SIZES, AND CIRCUITING.
7. ALL ELEVATIONS SHOWN ARE IN REFERENCE TO THE BENCHMARK AND MUST BE VERIFIED BY THE GENERAL CONTRACTOR AT GROUND BREAK.
8. FINISH WALK AND CURB ELEVATIONS SHALL BE 6" ABOVE FINISH PAVEMENT, UNLESS OTHERWISE NOTED.
9. ALL ON-SITE CONCRETE WALKS TO BE 4" THICK AND BROOM FINISHED.

BUSINESS SIGN DATA TABLE						
SIGN ID	SIGN QUANTITY	SIGN TYPE	SIGN MODEL	NO. OF SIDES	SIGN AREA PER SIDE (SQ. FT.)	TOTAL AREA (SQ. FT.)
S1	1	POLE SIGN "ARBY'S"	INTERNALLY ILLUMINATED	2	45.5 SQUARED	45.5
S2	2	DIRECTIONAL (4' POLE) "ENTER"	INTERNALLY ILLUMINATED	2	3.1 SQUARED	3.1
S3	2	DIRECTIONAL (4' POLE) "EXIT"	INTERNALLY ILLUMINATED	2	3.1 SQUARED	3.1
S4	1	DRIVE-THRU CANOPY	CP-2100	1	N/A	N/A
S5	1	POLE "MENU BOARD"	INTERNALLY ILLUMINATED	1	45.0 SQUARED	45.0
S6	1	WALL LOGO "ARBY'S"	INTERNALLY ILLUMINATED	1	17.67 SQUARED	17.67
S7	2	CANOPY "ARBY'S"	INTERNALLY ILLUMINATED	1	6.88 SQUARED	13.76
					TOTAL BLDG. SIGNAGE	31.43

20 10 0 20 40 60
SCALE IN FEET

Dig Safely. New York
800-962-7962
www.digsafelynewyork.org
- Call Before You Dig
- Wait The Required Time
- Confirm Utility Response
- Respect the Marks
- Dig With Care

ARBY'S RESTAURANT GROUP, INC.
1155 PERIMETER CENTER WEST
ATLANTA, GA 30338

TYLIN INTERNATIONAL
255 EAST AVENUE
ROCHESTER, NY 14604
(585) 512-2000

NO.	DATE:	DESCRIPTION
6		
5		
4		
3		
2		
1		

REVISIONS

DATE

DRAWING TITLE: SITE PLAN
PROJECT NAME: ARBY'S RESTAURANT
316-320 WEST MAIN STREET, CITY OF BATAVIA, GENESEE COUNTY, NY
CLIENT: VIELE CONSTRUCTION COMPANY
61 SWAN STREET, #3
BATAVIA, NY 14020

PROJECT NO.:	PROJ. MGR.:
43.XXXX.00	RLB
DATE:	DRWN. BY:
4/30/15	DMD
SCALE:	CHKD. BY:
1"=20'	RLB
DRAWING NO:	
C-1	
2 OF 8	

Detail List - Vernon Ave Residents' Concerns

Vernon Avenue has long been a quiet residential neighborhood with many children playing in the area. We are concerned development of the Arby's site as planned will drastically change our neighborhood in the following ways:

1. **Additional noise** - Traffic noise from Main Street will creep up Vernon Avenue as car traffic from the Arby's drive-thru exits onto Vernon Ave.

2. **24 Hour Lighting** - Residents on the Main Street end of Vernon Ave are already bothered by the lighting from Castilone auto dealership's expanded lot. An Arby's development will add to their concerns.

3. **Destruction of trees** - Vernon Ave was once covered by a canopy of silver maples which grew old at the same time, became dangerous and had to be removed. The planned development would create an eyesore which would add to the degredation of the appeal of our neighborhood. We are concerned that landscaping of any development preserve as far as possible the treed nature of our street so that it does not become as open as some other streets in the city.

4. **Worse traffic congestion at Main & Vernon** - The Arby's sketch plan shows semi trailer traffic exiting onto Vernon Ave toward Main St. It is already difficult to make a left turn onto Main St from Vernon Ave in either direction. People will be driving south on Vernon Ave to access the Arby's drive-thru, even if both driveways are on Main Street. The path of least resistance will always be Vernon Avenue.

5. **Increased traffic flow on the entire street** - Traffic flow from the Arby's drive-thru will inevitably turn right and exit north on Vernon Ave, thereby increasing the number of cars per day at all hours using Vernon Ave to avoid Main Street traffic. At present cars drive on Vernon Ave at dangerously high speeds that can result in accidents with children. Turning in either direction onto Richmond Ave at the North end of Vernon Ave is already difficult due to parking around the Robert Morris School building. This difficulty becomes dangerous when athletic events at Van Detta Stadium bring even more traffic into the area. In addition, we anticipate increased foot traffic on Vernon Ave as pedestrians walk between Van Detta and Arby's. Increased littering and even vandalism along Vernon Ave are expected results.

6. **Negative effect on property values** - Many residents, especially those at the southern end of Vernon Ave, have expressed their intention to list their properties for sale if the development goes through as planned. This will put a glut of houses on the market thereby lowering property values for the whole neighborhood. Residents are concerned that landlords will purchace properties and Vernon Ave will become increasingly rental properties rather than single family houses.

We therefore respectfully request you to reject the developers' plan to build an Arby's Restaurant at the corner of Vernon Ave. and Main Street.

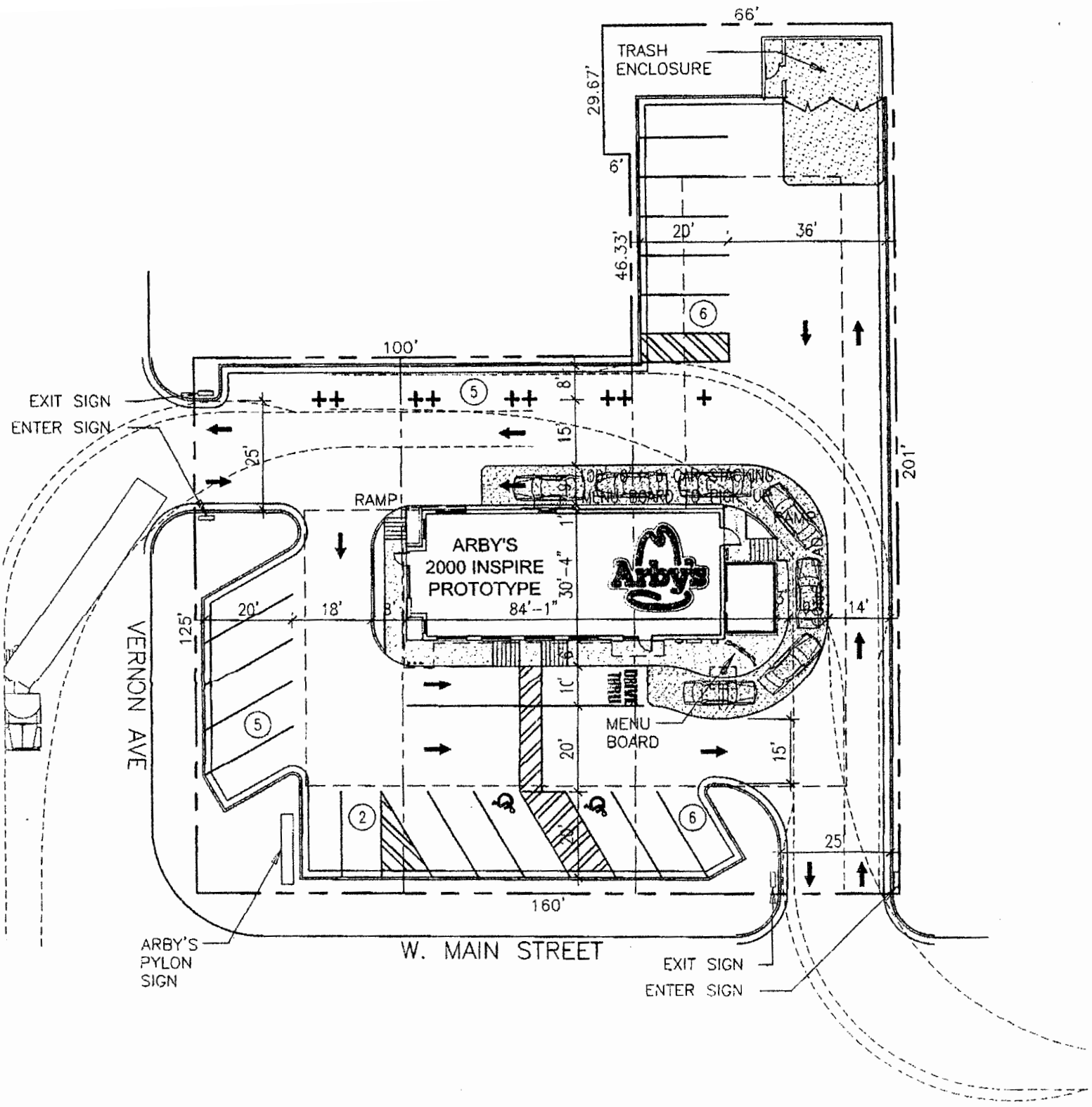

66'
TRASH ENCLOSURE
29.67'
6'
20'
36'
46.33'
100'
EXIT SIGN
ENTER SIGN
25'
RAMP
ARBY'S 2000 INSPIRE PROTOTYPE
84'-1"
30'-4"
Arby's
201'
125'
20'
18'
14'
VERNON AVE
MENU BOARD
15'
25'
160'
ARBY'S PYLON SIGN
W. MAIN STREET
EXIT SIGN
ENTER SIGN

Vernon Avenue Residents' Petition

We the undersigned residents of Vernon Avenue, Batavia, NY strongly object to the plans for development of an Arby's Restaurant at Vernon Avenue and Main Street as submitted to the Batavia City Planning and Development Committee by Viele Construction and Mancuso Realty as noted in the April 22, 2015 edition of the Batavia Daily News.

Vernon Avenue has long been a quiet residential neighborhood with many children playing in the area. We are concerned that development of the desired site will drastically change our neighborhood in the following ways:

1. Additional noise
2. 24 hour lighting
3. Destruction of more of the few trees we have left
4. Worse traffic congestion at Vernon and Main (difficult left turn now!)
5. Increased traffic flow on the entire street
6. Negative effect on property values

We therefore respectfully request the City Planning & Development Committee, The City Zoning Board of Appeals and the Genesee County Planning Board to reject the developers' request.

Name	Address	Phone/E-Mail (optional)
David A. Steele	44 Vernon Ave	343-1896
[illegible]	45 Vernon Ave	474-0452
Amber Dibble	45 Vernon Ave	455-1261
Mary Beyer	43 Vernon Ave	409-9453
[illegible]	44 Vernon Ave	343-1896
Shawn M. Grasso	50 Vernon Ave.	343-2131
[illegible]	50 Vernon Ave	343-2131
[illegible]	52 Vernon Ave	344-2124
[illegible]	51 Vernon	"

Vernon Avenue Residents' Petition

Name	Address	Phone/E-Mail (optional)
Paul H Schulte	29 Vernon Ave Batavia	343-5890
Ellen Schulte	29 Vernon Ave Bat.	343-5898
Bob Knipe	20 Vernon Ave.	343 5991
Dale Knipe	20 Vernon Ave	343-5991
Robert D. Scott	41 Vernon ave	344-2461
Barbara J. Scott	41 Vernon Ave.	344-2461
Carol Montreal	46 Vernon Ave	343-2479
Joseph A. VERSAGGI Jr.	14 VERNON AVE	344-0618
Paul D. Kruppe	10 VERNON AVE	343-1374
Joanne Kruppe	10 Vernon AVE	343-1374
[illegible]	8 Vernon Ave	585-813-6049
Jim Nunn	5 Vernon Ave	343-4337
Rachel F Mazzo	3 VERNON AVE	343-2618
Valerie Mullen	13 Vernon Ave	344-2421
[illegible]	43 Vernon Ave	409-9460
Susan Mefa	22 Vernon Ave	343-1573
G T Mahe	22 Vernon Ave	343-1573
L B. L	12 VERNON AVE	356-9631
Stephanie Morasco	12 Vernon Ave	356-9631
Tim Flanagan	11 Vernon Ave	749-1318
Meghan M Kiss	1A Vernon Avenue	409-9916
Caroline Szpaicher	6 Vernon Ave	716 471-5588
Patty Macauley	7 Vernon Ave	716-361-7205
Tim Gerland	21 Vernon Ave	356-9780

Vernon Avenue Residents' Petition

Name	Address	Phone/E-Mail (optional)
Holly Doxtater	52 Vernon Ave.	301-915-5482
Sabrina McGinnis	56 Vernon Ave	585-201-1463
[illegible]	63 Vernon Ave	585-993-6452
Jennie Zito	61 Vernon ave	343-4688
Melissa Mattico	57 Vernon Ave	356-8365
Kim Mattico	57 Vernon Ave	356-8364
[illegible]	53 Vernon Ave	409-6465
[illegible]	53 Vernon Ave	409-4732
Callum F Pillick	47 Vernon Avenue	716-785-2090
Shawn Sheron	37 Vernon Avenue	585-409-6216
[illegible]	37 Vernon Ave	585-409-6217
[illegible]	38 Vernon Avenue	585-356-2252
Michael A Jackson	58 Vernon Ave	585-343-3810
Kathleen Jackson	58 Vernon Ave	585-343-3810
Teresa Jackson	58 Vernon Ave	585-343-3810
Matthew R Jackson	58 Vernon Ave	585-343-3810
Mary Beth Ellis	62 Vernon Ave	585-409-1117
[illegible]	64 VERNON AVE	585-409-4436
Alison Lunon	64 Vernon Ave	585-737-6875
[illegible]	30 Vernon Ave	585-356-9519
[illegible]	28 Vernon Ave.	585-343-0556
[illegible]	26 VERNON AVE	585-356-4195
[illegible] Michaels	8 vernon ave	585-297-2433

Vernon Avenue Residents' Petition

Name	Address	Phone/E-Mail (optional)
Donna Dwyer	1A Vernon Ave Batavia	585-297-0920
Tina Rosone	4 Vernon Batavia	585-356-2624
Mike Anchor	25 Vernon Batavia	585-813-3680
Roxanne Hunt	31 Vernon Batavia	(585)356-4663
Jason Parker	36 Vernon Ave	585-409-3222
Mark Schnabl	48 Vernon Ave	315 750 6376
Sam Gallone	55 Vernon Ave	585 4097415
John C Pitt Jr	39 Vernon Ave	585-813-1605
Julie Higgins	38 Vernon Ave	585-343-0545
Ida Holt	33 Vernon Ave	343-6197
Don DiLauro II	32 Vernon Ave	716-863-5488
Patrick Viscuso	23 Vernon Ave	716-344-0940
Angela L. Viscuso	23 Vernon Ave.	344-0940
Louise Capriano	4 Vernon Ave	343-8132
[illegible]	31 Vernon Ave	356-3478
Ann Sutherland	49 Vernon Ave	813-8514
Lindsay Carney	35 Vernon Ave	716-474-1838

Residential District
KINGSBURY
VERNON AVE
R-3 Residential District
NILYON ST
330
318
316
R-3 Residential District
MONTCLAIR AV
C-2 General Commercial District
SLYON ST

Creation Date: Apr 04, 2013 15:44
Modification Date: Apr 07, 2013 20:51

Copyright ©2013 Pictometry International Corp.